Instruction Manual

Unique Single Seat Valve – Aseptic

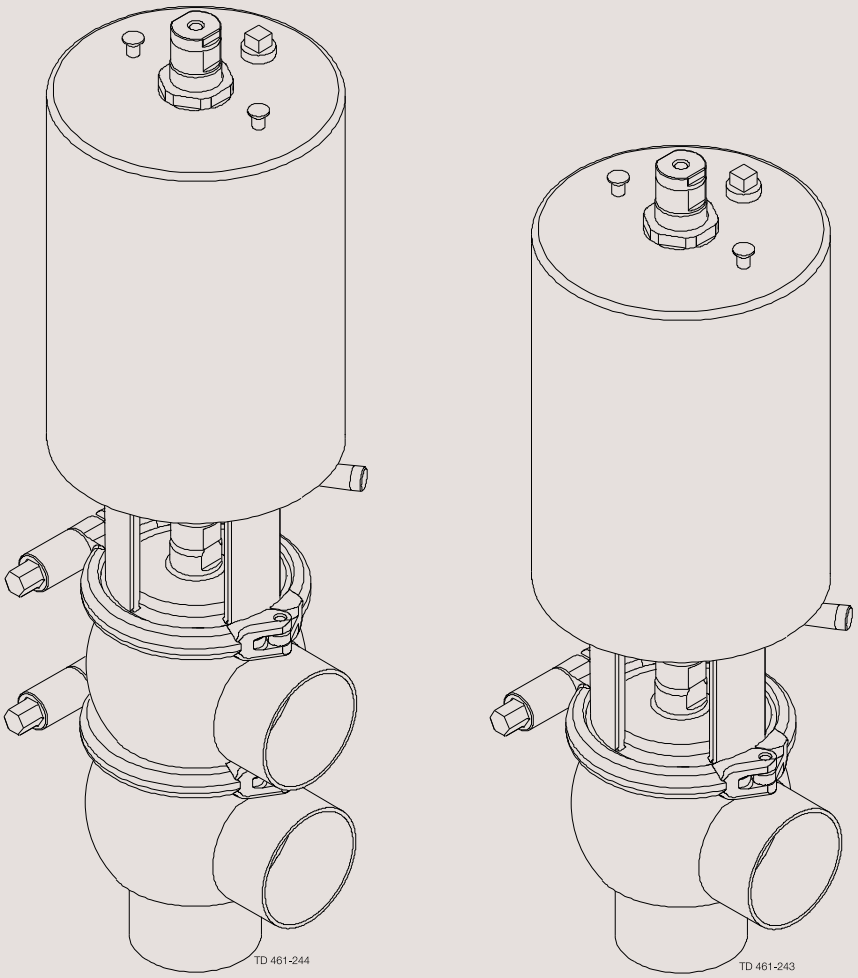

ESE00529-EN12 2022-11

Original manual

Table of contents

The information herein is correct at the time of issue but may be subject to change without prior notice

1 Declarations of Conformity

EU Declaration of Conformity

The Designated Company

Alfa Laval Kolding A/S, Albuen 31, DK-6000 Kolding, Denmark, +45 79 32 22 00
Company name, address and phone number

Hereby declare that

Valve
Designation

Unique SSV PN10
Type

Serial number from 1000000 to 70000000000

is in conformity with the following directives with amendments:
- Machinery Directive 2006/42/EC
- Pressure Equipment Directive 2014/68/EU category 1 and subjected to assessment procedure Module A. May only be used for fluids in Group 2

The person authorised to compile the technical file is the signer of this document.

Global Product Quality Manager Title	Lars Kruse Andersen Name

Kolding, Denmark Place	2022–11-18 Date (YYYY-MM-DD)	Signature

This Declaration of Conformity replaces Declaration of Conformity dated 2018-04-01

UK Declaration of Conformity

The Designated Company

Alfa Laval Kolding A/S, Albuen 31, DK-6000 Kolding, Denmark, +45 79 32 22 00
Company name, address and phone number

Hereby declare that

Valve
Designation

Unique SSV PN10
Type

Serial number from 1000000 to 70000000000

is in conformity with the following directives with amendments:
- The Supply of Machinery (Safety) Regulations 2008
- The Pressure Equipment (Safety) Regulations 2016 category 1 and subjected to assessment procedure Module A. May only be used for fluids in Group 2

Signed on behalf of: Alfa Laval Kolding A/S

Global Product Quality Manager Title	Lars Kruse Andersen Name
Kolding, Denmark Place	2022–11-18 Date (YYYY-MM-DD)
	Signature

DoC Revison_01_112022

2 Safety

Unsafe practices and other important information are emphasised in this manual.
Warnings are emphasised by means of special signs

2.1 Important information

Always read the manual before using the valve!

WARNING
Indicates that special procedures must be followed to avoid serious personal injury.

CAUTION
Indicates that special procedures must be followed to avoid damage to the valve.

NOTE
Indicates important information to simplify or clarify procedures.

This Instruction manual is designed to provide the user with the information to perform tasks safely for all phases in the lifetime of the product supplied.

The user shall always read the safety section first. Hereafter the user can skip to the relevant section for the task to be carried out or for the information needed.

This is the complete manual for the supplied product.

Operators
The operators shall read and understand the instruction manual for the supplied product.

Maintenance personnel
The maintenance personnel shall read and understand the instruction manual.
The maintenance personnel or technicians shall be skilled within the field required to carry out the maintenance work safely.

Trainees
Trainees can perform tasks under the supervision of an experienced employee.

People in general
The public shall not have access to the supplied product.

How to contact Alfa Laval
Contact details for all countries are
continually updated on our website.
Please visit www.alfalaval.com to access the information directly.

Unsafe practices and other important information are emphasised in this manual.
Warnings are emphasised by means of special signs

Different actuator types for the SSV valve
In June 2016 the below change was implemented and the “removable yoke with bolts” version is thereby phased out and replaced by the “yoke without bolts” version.

NOTE
It is important to check for warnings marked on the actuator when servicing an actuator - see below table.

Actuator type	**Non-maintainable actuator** Spring under load and **CANNOT** be opened 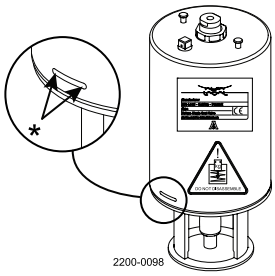 *) Lock wire opening is locked when warning is marked on actuator	**Fully maintainable actuator** Spring cage and can be opened 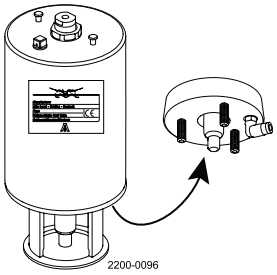 	**Fully maintainable actuator** Spring cage and can be opened 
Yoke type	Non-removable yoke	“Removable yoke with bolts”. If the yoke with bolts is damaged it has to be replaced by the “yoke without bolts”	“Yoke without bolts”
Service	Not possible to service internally (it is not possible to change piston o-rings)	Yes	Yes
Marked with warnings	Yes	No	No
Year of production	From 2006	From 2006 to June 2016	From June 2016

2 Safety

Unsafe practices and other important information are emphasised in this manual.
Warnings are emphasised by means of special signs

2.2 Warning signs

General warning

Caustic agents

Danger of injury: (an extra yellow label marked on the actuator from June 2016)
Do **NOT** attempt to cut the actuator open due to spring under load.
(The lock wire opening is locked).

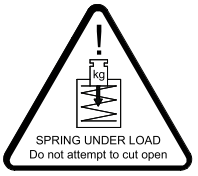

Danger of injury (lasermarked on the actuator)
Do **NOT** attempt to disassemble the actuator due to spring under load danger!
(The lock wire opening is locked)

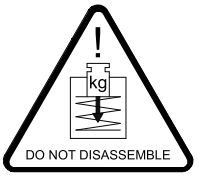

All warnings in this manual are summarised on this page.
Pay special attention to the instructions below so that severe personal injury and/or damage to the valve are avoided.

2.3 Safety precautions

Actuators

If support air is utilised:

- Shock in the actuator must **NEVER** occur
- Support air on high pressure actuator versions is **NOT** allowed

To prevent shock in the actuator and to prevent exceeding 10 bar/145 PSI product pressure, Alfa Laval recommends **NOT** to exceed 3 bar/43.5 PSI support air on the spring side in all the Unique SSV actuators.

If support air is connected always use the 3 bar/43.5 PSI air relief fittings = 9611995903.
Using the air relief fitting also extends the service life of the actuator piston o-ring.

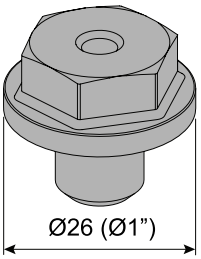

Pos. no. 5
For actuators, manufactured year 2005-2018, with serial number from 1000000 - 5999999 and from 20000000000 - 59999999999 always use steel adapter (pos 5) = 9614065301
Tighten torque = 30 Nm

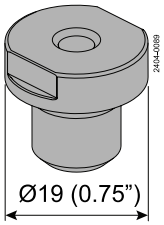

Pos. no. 5
For actuators, manufactured year 2019 --> with serial number from 6000000 to 7000000 and from 60000000000 to 70000000000 always use steel adapter (pos 5) = 9615374701
Tighten torque = 15 Nm

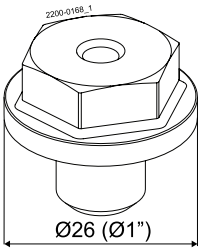

Pos. no. 5
For actuators, manufactured year 2005-2018, with serial number from 1000000 - 5999999 and from 20000000000 - 59999999999 always use steel adapter (pos 5) = 9614065301
Tighten torque = 30 Nm

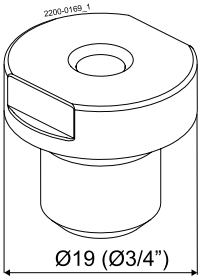

Pos. no. 5
For actuators, manufactured year 2019 --> with serial number from 6000000 to 7000000 and from 60000000000 to 70000000000 always use steel adapter (pos 5) = 9615374701
Tighten torque = 15 Nm

2 Safety

All warnings in this manual are summarised on this page.
Pay special attention to the instructions below so that severe personal injury and/or damage to the valve are avoided.

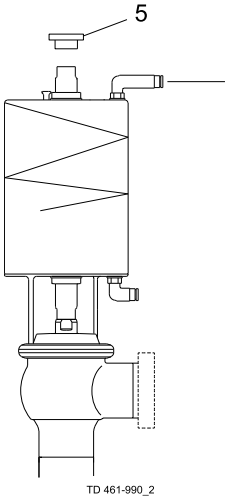

Alfa Laval recommends max. 3 bar support air
Always use the “3 bar air relief fittings” on support air.
Alfa Laval article number = 9611995903

All warnings in this manual are summarised on this page.
Pay special attention to the instructions below so that severe personal injury and/or damage to the valve are avoided.

Installation

Always read the technical data thoroughly (see section 6 Technical data)
Always release compressed air after use
Never touch moving parts if the actuator is supplied with compressed air
Never touch the valve or the pipelines when processing hot liquids or when sterilising
Never dismantle the valve with valve and pipelines under pressure
Never dismantle the valve when it is hot

Never cut the actuator open, due to spring under load - if marked with this warning

Do **NOT** attempt to disassemble the actuator due to spring under load danger!

Operation

Never dismantle the valve with valve and pipelines under pressure
Never dismantle the valve when it is hot
Always read the technical data thoroughly (see section 6 Technical data)
Always release compressed air after use
Never touch the valve or the pipelines when processing hot liquids or when sterilising
Never touch moving parts if the actuator is supplied with compressed air
Always rinse well with clean water after cleaning

Always handle lye and acid with great care

Maintenance

Always read the technical data thoroughly (see section 6 Technical data)
Always release compressed air after use
Never service the valve when it is hot
Never service the valve with valve and pipelines under pressure
Never stick your fingers through the valve ports if the actuator is supplied with compressed air
Never touch moving parts if the actuator is supplied with compressed air
Always use Alfa Laval genuine spare parts

Never cut the actuator open, due to spring under load danger - if marked with this warning

Do **NOT** attempt to disassemble the actuator due to spring under load danger!

Transportation

Always ensure that compressed air is released
Always ensure that all connections are disconnected before attempting to remove the valve from the installation
Always drain liquid out of valves before transportation
Always use predesigned lifting points if defined
Always ensure sufficient fixing of the valve during transportation - if specially designed packaging material is available, it must be used

2 Safety

All warnings in this manual are summarised on this page.
Pay special attention to the instructions below so that severe personal injury and/or damage to the valve are avoided.

STORAGE
Ideally, as a guide Alfa Laval recommend:

- Store supplied product as supplied in original packaging
- Port opening should be protected against any ingress
- Bare steel (not stainless) should be lightly oiled/greased
- Store in a clean, dry place without direct sunlight or UV light
- Temperature range -5 to 40°C
- Relative humidity less than 60%
- No exposure to corrosive substances (also air contained).

This instruction manual is part of the delivery. Study the instructions carefully.
The items refer to the parts list and service kits section.
The valve is supplied as separate parts as standard (for welding).
The valve is assembled before delivery if it is supplied with fittings.

3.1 Unpacking/delivery

Step 1
CAUTION
Alfa Laval cannot be held responsible for incorrect unpacking.

Check the delivery for:
1. Complete valve, shut-off valve or change-over valve (see steps 3a and 3b.
2. Delivery note.

Step 2
Actuator version can be ordered either “fully maintainable” (no warning marked on actuator) or as “non-maintainable” (warning marked on actuator).

Non-maintainable actuator | **Fully maintainable actuator**

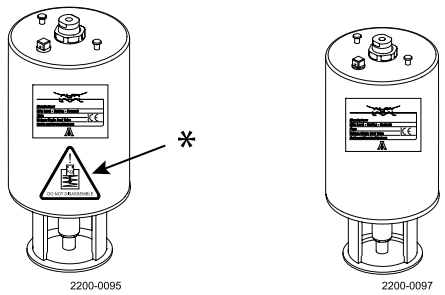

* = lasermarked warning

Step 3

3a
Shut-off valve:
1. Complete actuator
2. Bonnet (20)
3. Clamp (19)
4. Valve plug (23)
5. Valve body (22)
6. Diaphragm (29)
7. Disc for diaphragm (30)
8. Upper spindle (31)

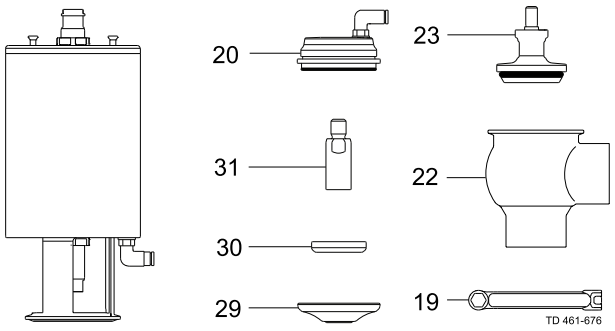

3b
Change-over valve:
1. Complete actuator
2. Bonnet (20)
3. 2 x clamps (19)
4. Valve plug (27)
5. Lower valve body (22)
6. Valve seat (28)
7. Upper valve body (26)
8. Diaphragm (29)
9. Disc for diaphragm (30)
10. Upper spindle (31)

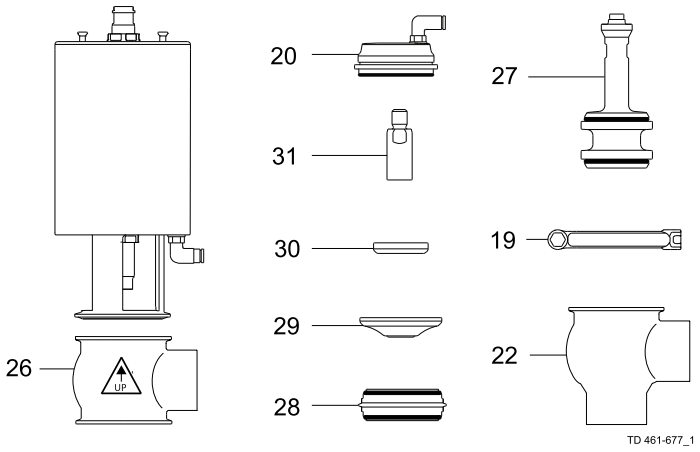

3 Installation

This instruction manual is part of the delivery. Study the instructions carefully.
The items refer to the parts list and service kits section.
The valve is supplied as separate parts as standard (for welding).
The valve is assembled before delivery if it is supplied with fittings.

Step 4
Remove possible packing material from the valve / valve parts.
Inspect the valve / valve parts for visible transport damage.
Avoid damaging the valve / valve parts.

Study the instructions carefully and pay special attention to the warnings!
The valve has welding ends as standard but can also be supplied with fittings.

3.2 General installation

Step 1

- CAUTION
  Alfa Laval cannot be held responsible for incorrect installation.
- **Always** release compressed air after use.
- **Always** read the technical data thoroughly.
  See section 6 Technical data.

Do **NOT** attempt to disassemble the actuator due to spring under load danger!

If marked with this warning, do **NOT** attempt to cut the actuator open, due to spring under load danger!

Step 2

Never touch moving parts if the actuator is supplied with compressed air.

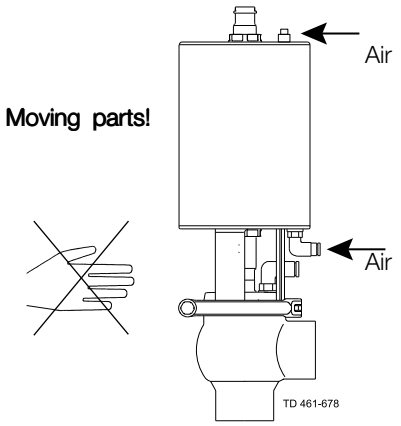

Step 3

To avoid water hammering, it is recommended to install the valve so that the flow is against the spring closing direction.

Shock in the actuator must **never** occur.

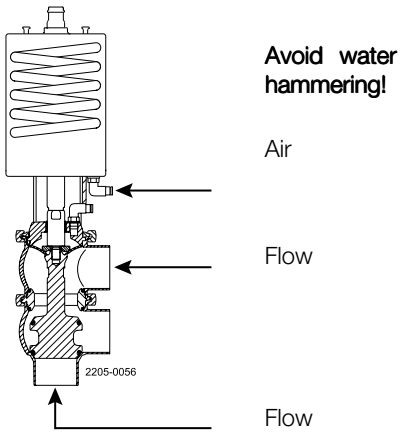

3 Installation

Study the instructions carefully and pay special attention to the warnings!
The valve has welding ends as standard but can also be supplied with fittings.

Step 4
Avoid stressing the valve.
Pay special attention to:
- Vibrations.
- Thermal expansion of the pipelines.
- Excessive welding.
- Overloading of the pipelines.

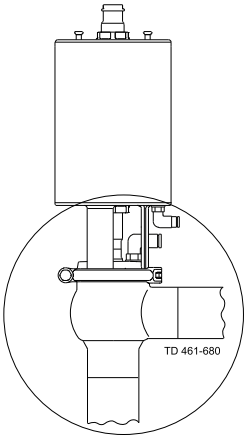

Risk of damage!

Step 5

Always check if the diaphragm is tight - it can be dangerous if it leaks steam/CIP.
Therefore always mount the air fitting included in the box with the valve on the bonnet and mount hose to the drain accordingly.
The hose must be a 4 mm hose for ø25/38 mm and DN25/40 and a 6 mm hose for larger typer.

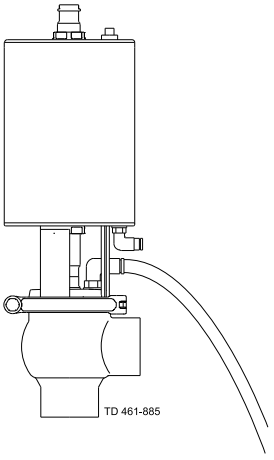

To avoid all danger, the hose must reach the drain!

Step 6
Make sure that the leak detection hole in the valve body:

1. is visible, when mounting the valve vertically
2. always is downwards due to self-draining, when the valve is mounted horizontally.

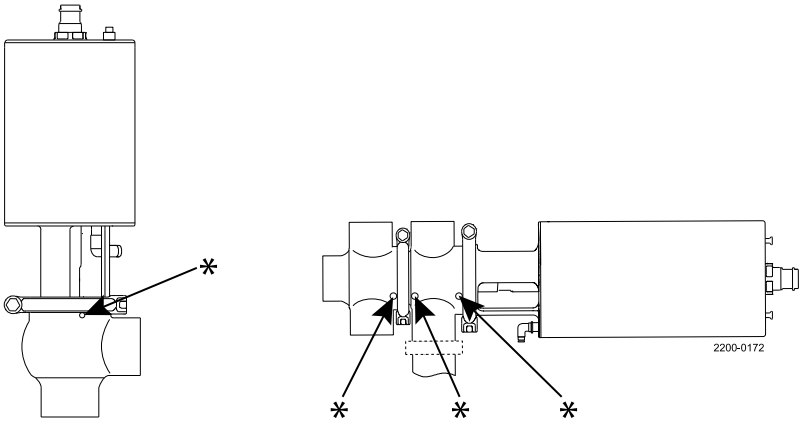

* = Leakage detection hole

Study the instructions carefully.
The valve is supplied as separate parts to facilitate welding.
The items refer to the parts list and service kits section.
Check the valve for smooth operation after welding.

3.3 Welding

Step 1
Always install valves with more than one valve body so that the seals between the valve bodies can be replaced. Do not weld more than one valve body into the system. It is recommended to fit sufficient clamps/unions to be able to disassemble the valve for servicing.

Valve size	A (mm)	B (mm)
DN25/25 mm	*	630
DN40/38 mm	*	700
DN50/51 mm	*	750
DN65/63.5 mm	*	740
DN80/76 mm	*	800
DN100/101.6 mm	*	790

* Depending on body combination and piping solution.

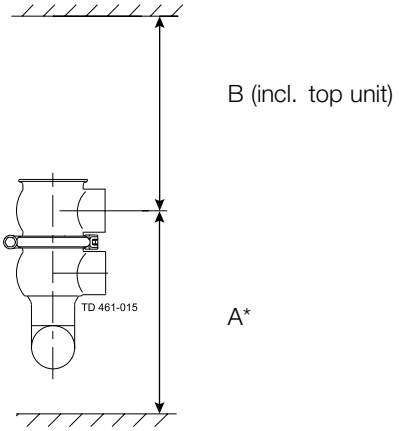

Step 2
Assemble the valve in accordance with the steps on page .
Pay special attention to the warnings!

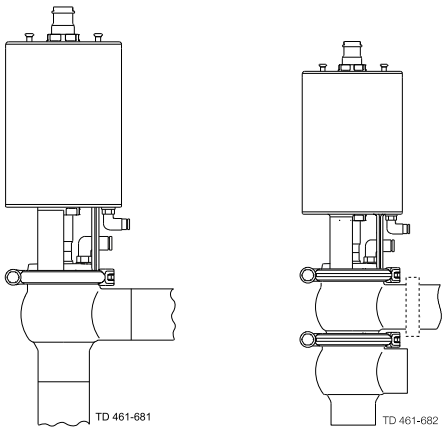

Step 3
Pre-use check:
1. Supply compressed air to the actuator.
2. Open and close the valve several times to ensure that it operates smoothly.

Pay special attention to the warnings!

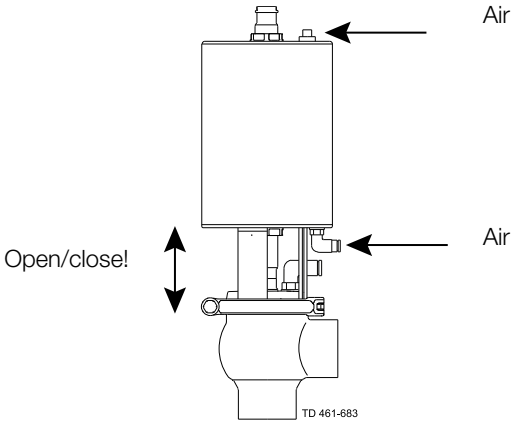

3 Installation

Study the instructions carefully.
The valve is supplied as separate parts to facilitate welding.
The items refer to the parts list and service kits section.
Check the valve for smooth operation after welding.

3.4 Recycling information

- **Unpacking**

- Packing material consists of wood, plastics, cardboard boxes and in some cases metal straps
- Wood and cardboard boxes can be reused, recycled or used for energy recovery
- Plastics should be recycled or burnt at a licensed waste incineration plant
- Metal straps should be sent for material recycling

- **Maintenance**

- During maintenance, oil and wearing parts in the machine are replaced
- All metal parts should be sent for material recycling
- Worn out or defective electronic parts should be sent to a licensed handler for material recycling
- Oil and all non-metal wearing parts must be disposed of in accordance with local regulations

- **Scrapping**

- At end of use, the equipment must be recycled in accordance with the relevant local regulations. Besides the equipment itself, any hazardous residues from the process liquid must be considered and dealt with in a proper manner. When in doubt, or in the absence of local regulations, please contact your local Alfa Laval sales company. If the actuator is marked with a danger warning, do not attempt to cut the actuator open.

Do **NOT** attempt to disassemble the actuator due to spring under load danger!

If marked with this warning, do **NOT** attempt to cut the actuator open, due to spring under load danger!

Study the instructions carefully and pay special attention to the warnings!
Ensure that the valve operates smoothly.
The items refer to the parts list and service kits section.

4.1 Operation

Step 1

- **CAUTION**
  Alfa Laval cannot be held responsible for incorrect installation.
- **Always** release compressed air after use.
- **Always** read the technical data thoroughly.
  See section 6 Technical data.
- **Always** use Alfa Laval genuine spare parts.
  The warranty of Alfa Laval products is dependent on use of Alfa Laval genuine spare parts.

Do **NOT** attempt to disassemble the actuator due to spring under load danger!

If marked with this warning, do **NOT** attempt to cut the actuator open, due to spring under load danger!

Step 2

Never touch the valve or the pipelines when processing hot liquids or when sterilising.

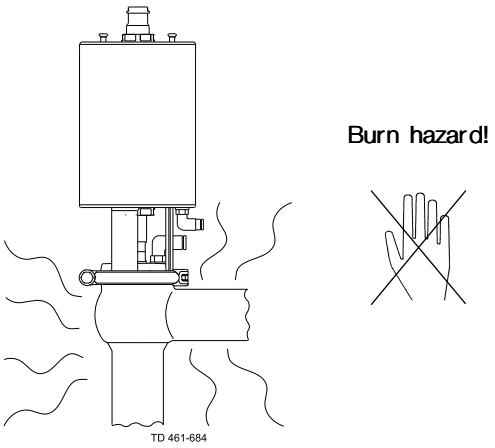

Step 3

Never touch moving parts if the actuator is supplied with compressed air.

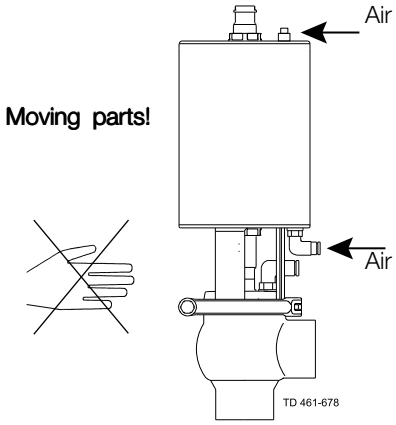

4 Operation

Study the instructions carefully and pay special attention to the warnings!
Ensure that the valve operates smoothly.
The items refer to the parts list and service kits section.

Step 4
Lubrication of valves:
1. Ensure smooth movement between lip seal (A) and plug stem (B).
2. Lubricate the lip seal with Alfa Laval Lubricant if necessary (see page 24).

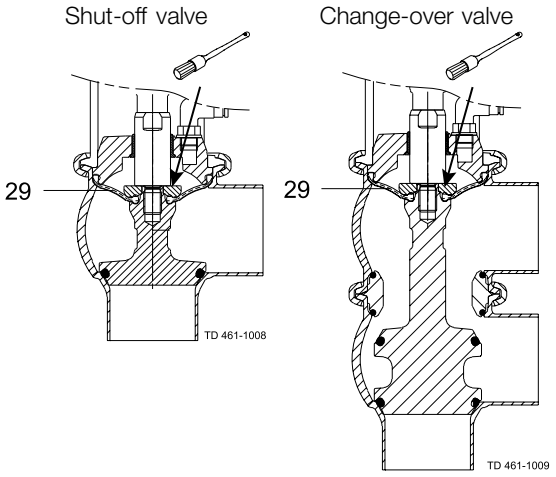

Step 5
Lubrication of actuator:
1. Ensure smooth movement of the actuator (the actuator is lubricated before delivery).
2. Lubricate all seals with Molykote Longterm 2 plus if necessary.

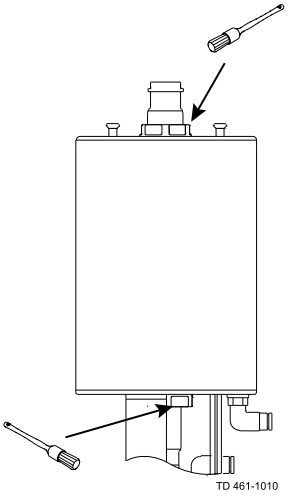

Pay attention to possible faults. Study the instructions carefully.
The items refer to the parts list and service kits section.

4.2 Troubleshooting

NOTE!

Study the maintenance instructions carefully before replacing worn parts - see page 24.

Problem	Cause/result	Repair
External product leakage	Worn or damaged lip seal and/or O-ring	- Replace the seals - Replace with seals of a different rubber grade
Internal product leakage	- Worn or product affected plug seal - Product deposits on the seat and/or plug - Product pressure exceeds actuator specification	- Replace the seal - Replace with a seal of a different rubber grade - Frequent cleaning - Replace with a high pressure actuator - Use auxiliary air on the spring side (do not exceed 3 bar). Alfa Laval article number = 9611995903. - See section 2.3 Safety precautions - Reduce product pressure
Water hammer	The flow direction is the same as the closing direction	- The flow direction should be against the closing direction. - See section 3.2 General installation, . - Throttle air release of solenoid in top unit
The valve does not open/close	Product pressure exceeds actuator specification	- Replace with a high pressure actuator - Reduce product pressure - Use auxiliary air on the spring side. Always use the pressure relief fittings (3 bar) on support side. Alfa Laval article number = 9611995903

If marked with a danger warning, do **NOT** attempt to cut the actuator open, due to spring under load.

Do **NOT** attempt to disassemble the actuator due to spring under load danger!

Do **NOT** attempt to cut the actuator open due to spring under load danger!

4 Operation

The valve is designed for cleaning in place (CIP).
Study the instructions carefully and pay special attention to the warnings!
NaOH = Caustic soda.
HNO_3 = Nitric acid.

4.3 Recommended cleaning

Step 1

Always handle lye and acid with great care.

Caustic danger!

Always use rubber gloves!

Always use protective goggles!

Step 2

Never touch the valve or the pipelines when sterilising.

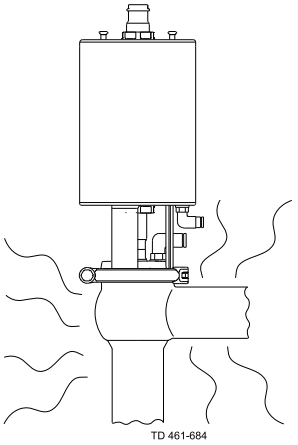

Burn hazard!

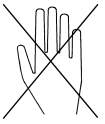

Step 3
Clean the plug and the seats correctly.
Pay special attention to the warnings.
Lift and lower valve plug momentarily!

Shut-off valve

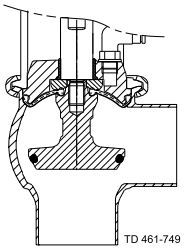

Change-over valve

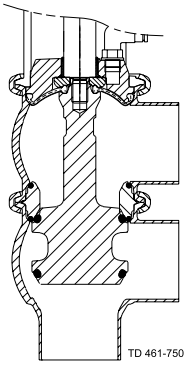

Step 4
Examples of cleaning agents:
Use clean water, free from chlorides.

1. 1% by weight NaOH at 70° C

1 kg NaOH	+	100 l water	=	Cleaning agent.
2.2 l 33% NaOH	+	100 l water	=	Cleaning agent.

2. 0.5% by weight HNO_3 at 70° C

0.7 l 53% HNO_3	+	100 l water	=	Cleaning agent.

The valve is designed for cleaning in place (CIP).
Study the instructions carefully and pay special attention to the warnings!
NaOH = Caustic soda.
HNO_3 = Nitric acid.

Step 5

1. Avoid excessive concentration of the cleaning agent.
2. Adjust the cleaning flow to the process.
3. **Always** rinse well with clean water after the cleaning.

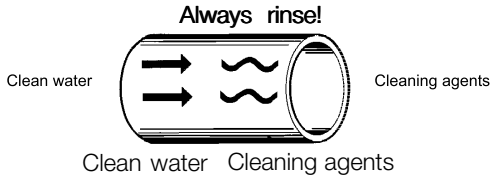

NOTE

The cleaning agents must be stored/disposed of in accordance with current regulations/directives.

5 Maintenance

Service the valve regularly.
Study the instructions carefully and pay special attention to the warnings!
Always use Alfa Laval genuine spare parts. Always keep spare rubber seals and lip seals in stock.
Check the valve for smooth operation after servicing.

5.1 General maintenance

Step 1

- CAUTION
  Alfa Laval cannot be held responsible for incorrect installation.
- **Always** release compressed air after use.
- **Always** read the technical data thoroughly.
  See section 6 Technical data.
- **Always** use Alfa Laval genuine spare parts.
  The warranty of Alfa Laval products is dependent on use of Alfa Laval genuine spare parts.

Do **NOT** attempt to disassemble the actuator due to spring under load danger!

If marked with this warning, do **NOT** attempt to cut the actuator open, due to spring under load danger!

Step 2

Never service the valve when it is hot.

Never service the valve with valve and pipelines under pressure.

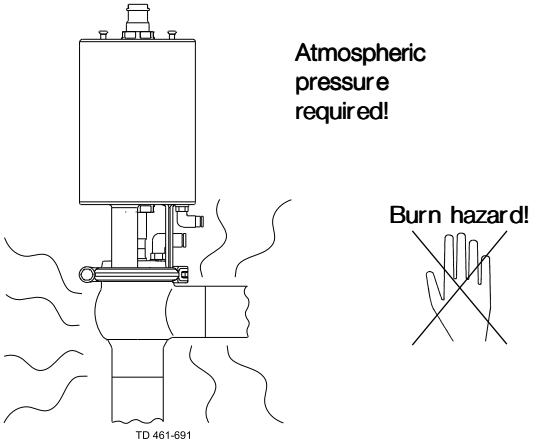

Step 3

Never stick your fingers through the valve ports if the actuator is supplied with compressed air.

Never touch the moving parts if the actuator is supplied with compressed air.

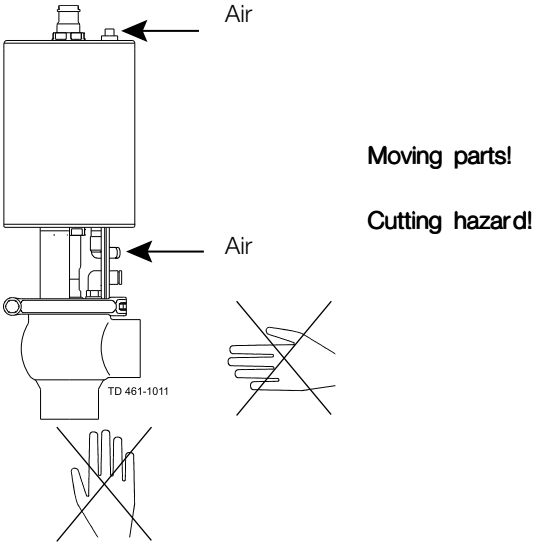

Service the valve regularly.
Study the instructions carefully and pay special attention to the warnings!
Always use Alfa Laval genuine spare parts. Always keep spare rubber seals and lip seals in stock.
Check the valve for smooth operation after servicing.

Below are some guidelines for maintenance and lubrication intervals. Please note that the guidelines are for normal working conditions in one shift.

	Product wetted seals	Actuator bushings complete
Preventive maintenance	**Replace after 12 months depending on working conditions.**	**Replace after 5 years depending on working conditions.**
Maintenance after leakage (leakage normally starts slowly)	**Replace at the end of the day.**	**Replace when possible.**
Planned maintenance	- Regular inspection for leakage and smooth operation. - Keep a record of the valve. - Use the statistics for inspection planning. **- Replace after leakage.**	- Regular inspection for leakage and smooth operation. - Keep a record of the actuator. - Use the statistics for inspection planning. **- Replace after leakage.**
Lubrication	**Before fitting** Alfa Laval Silicon based Food-grade Lubricant USDA H1 approved grease	**Before fitting** Molykote Longterm 2 plus

Pre-use check:

1. Supply compressed air to the actuator.
2. Open and close the valve several times to ensure that it operates smoothly.
   Pay special attention to the warnings!

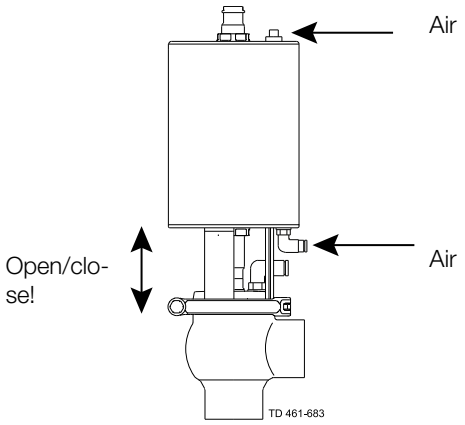

Recommended spare parts
Service kits (see section 7 Parts list and service kits)

5 Maintenance

Service the valve regularly.
Study the instructions carefully and pay special attention to the warnings!
Always use Alfa Laval genuine spare parts. Always keep spare rubber seals and lip seals in stock.
Check the valve for smooth operation after servicing.

5.2 Dismantling shut-off valve

If the actuator is marked with a danger warning, do **NOT** attempt to cut the actuator open.

Do **NOT** attempt to disassemble the actuator due to spring under load danger!

Do **NOT** attempt to cut the actuator open due to spring under load danger!

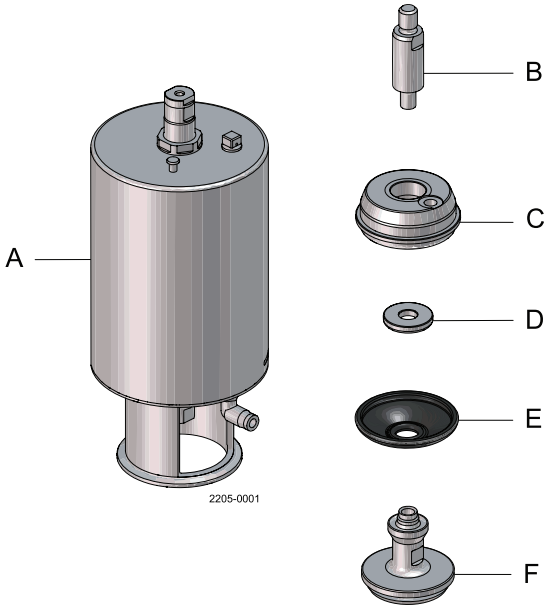

A = Actuator
B = Spindel
C = Bonnet
D = Disc
E = Diaphragm
F = Plug

Service the valve regularly.
Study the instructions carefully and pay special attention to the warnings!
Always use Alfa Laval genuine spare parts. Always keep spare rubber seals and lip seals in stock.
Check the valve for smooth operation after servicing.

Step 1
Move the plug in top position
Remove the air drain hose
Ensure pipe is empty and not pressurized
and then loosen the clamp using a 10 mm spanner

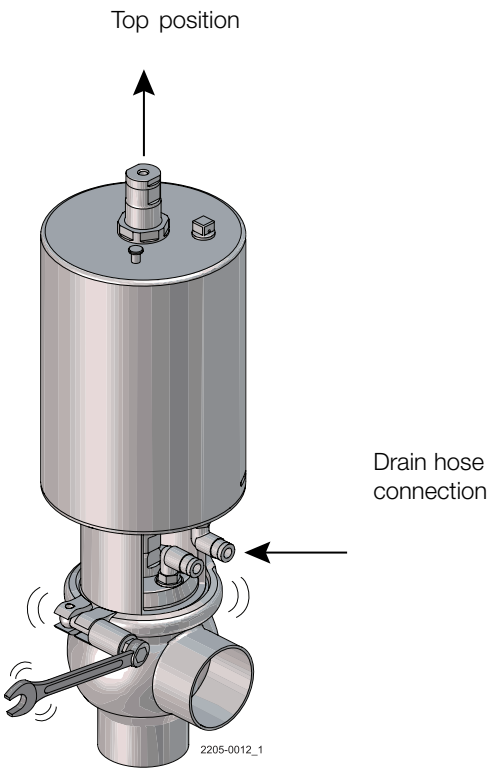

Step 2
Loosen the plug from the actuator by usning two 17 spanners

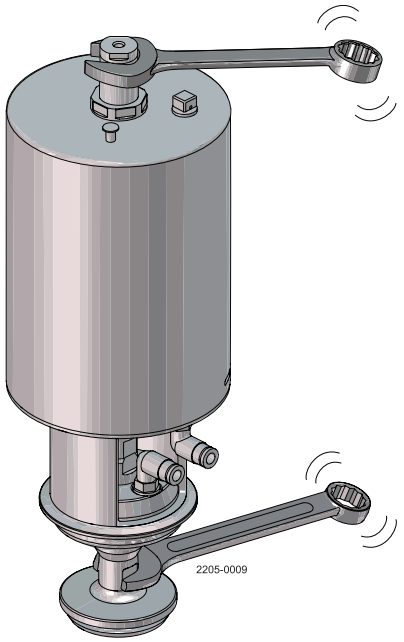

Service the valve regularly.
Study the instructions carefully and pay special attention to the warnings!
Always use Alfa Laval genuine spare parts. Always keep spare rubber seals and lip seals in stock.
Check the valve for smooth operation after servicing.

Step 3
Remove the bonnet

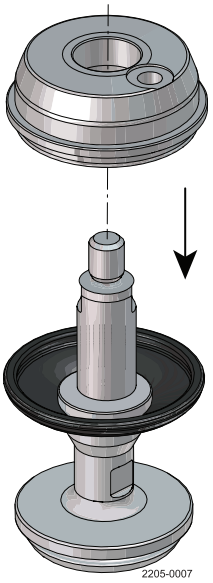

Step 4
Loosen the plug from the spindle by using two 17 spanners
If necessary can the bushing (24) in the bonnet be changed
Clean all parts and replace diaphragm and plug seal

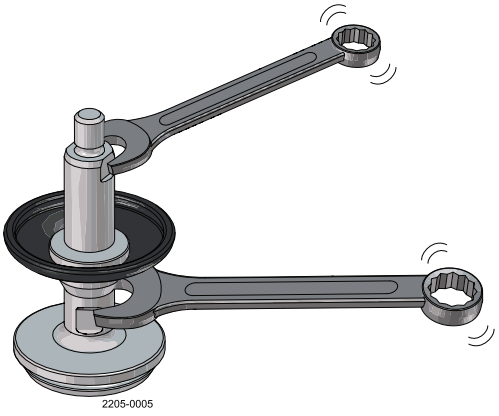

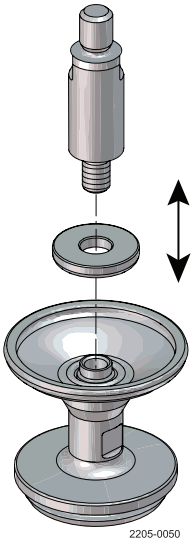

Service the valve regularly.
Study the instructions carefully and pay special attention to the warnings!
Always use Alfa Laval genuine spare parts. Always keep spare rubber seals and lip seals in stock.
Check the valve for smooth operation after servicing.

5.3 Dismantling change-over valve

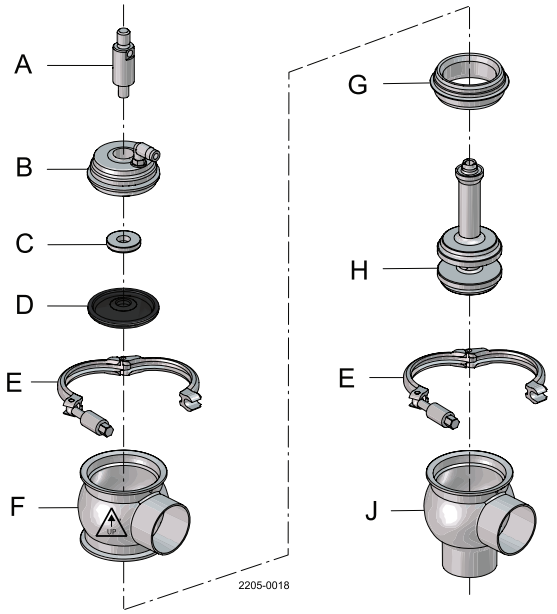

A = Spindle
B = Bonnet
C = Disc
D = Diaphragm
E = Clamp
F = Upper valve body
G = Seat
H = Change-over plug
J = Lower valve body

CORRECT assembling and disassembling to avoid destroying (stretching) diaphragm

IMPORTANT!
The mechanical stop is in lower body.
To adoid overstretching the diaphragm the lower boby clamp must not be loosened before the upper body clamp.

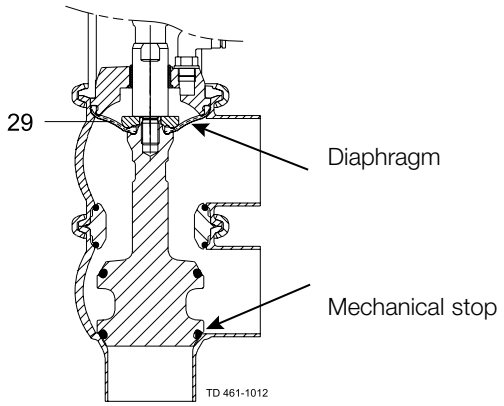

Recommended spare parts
Service kits (see section 7 Parts list and service kits)

Upper clamp

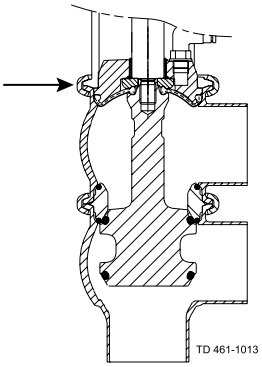

Place the plug in upper position and loosen the upper clamp.

5 Maintenance

Service the valve regularly.
Study the instructions carefully and pay special attention to the warnings!
Always use Alfa Laval genuine spare parts. Always keep spare rubber seals and lip seals in stock.
Check the valve for smooth operation after servicing.

INCORRECT assembling and disassembling of Unique SSV Aseptic change-over valve

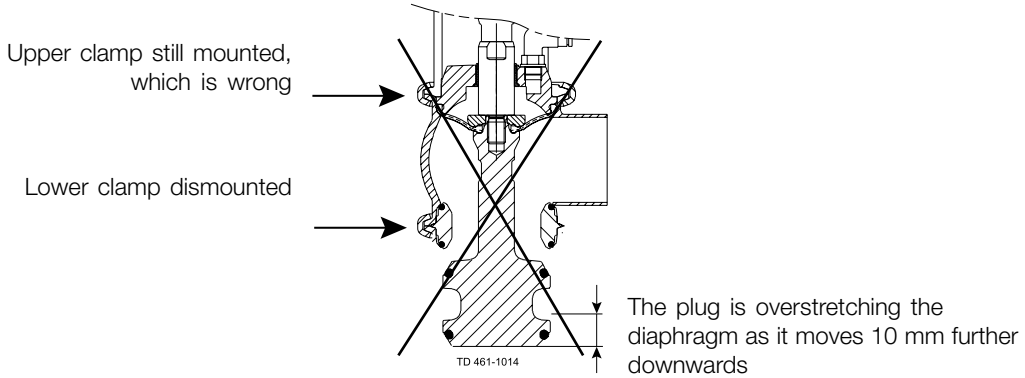

Step 1
When dismounting always mark the position of actuator, upper and lower valve body,
This makes the reassembly much easier, as the valve can be mounted up in the same position in the workshop.

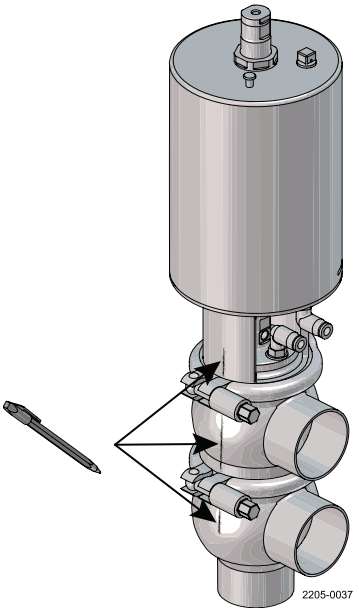

Service the valve regularly.
Study the instructions carefully and pay special attention to the warnings!
Always use Alfa Laval genuine spare parts. Always keep spare rubber seals and lip seals in stock.
Check the valve for smooth operation after servicing.

Step 2
Ensure that the actuator stem Is in upper position before loosing the upper clamp.
Remove the air drain hose.
Ensure pipe is empty and not pressurized.
ALWAYS start with dismounting the upper clamp to avoid damaging the diaphragm.
IMPORTANT
Please remember **NOT** to dismount the lower clamp unless plug stays in the upper position (only type NO actuator), as diaphragm then will be destroyed if plug moves downwards.

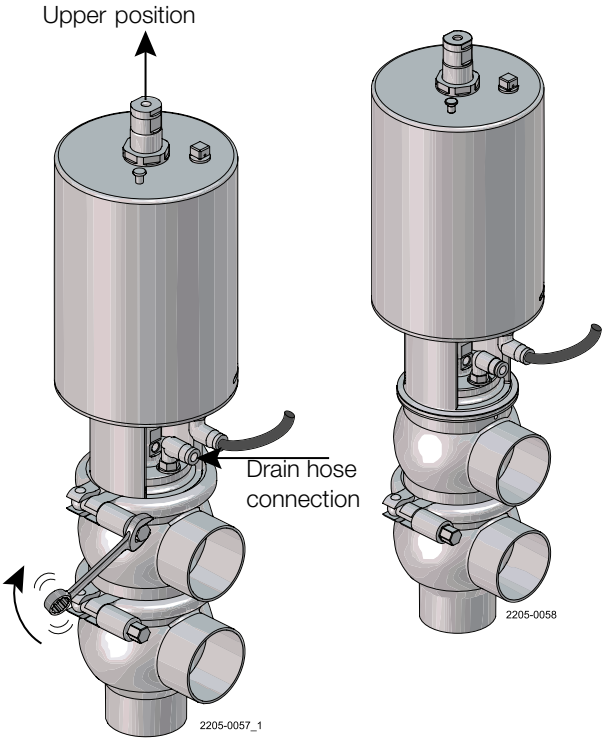

Step 3

Dismount lower clamp and lower valve body.

DANGER!
Finger cuts at “bonnet” and “seat ring”

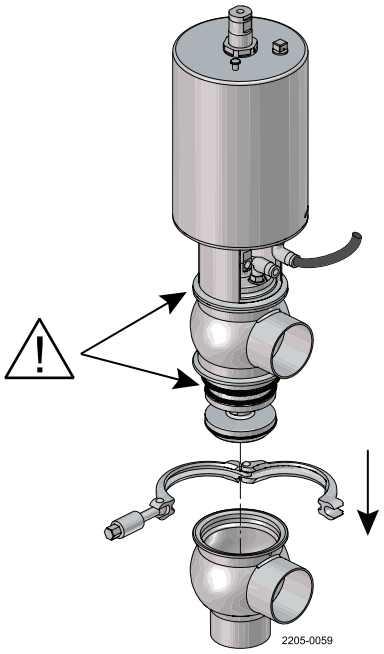

Service the valve regularly.
Study the instructions carefully and pay special attention to the warnings!
Always use Alfa Laval genuine spare parts. Always keep spare rubber seals and lip seals in stock.
Check the valve for smooth operation after servicing.

Step 4
Loosen the spindle from the actuator. Use 17 mm spanners.
Ensure actuator stem is in lower position.
Now the plug/seat/upper valve body can be removed from the actuator yoke.

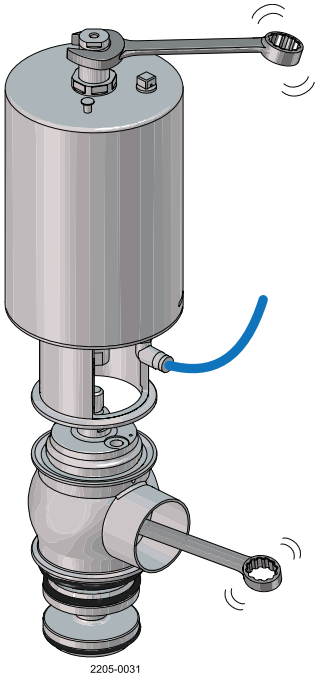

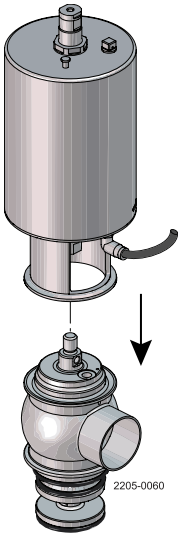

Step 5
Loosen the spindle from the plug. Use 17 mm spanners.
It is easiest to use a vice.

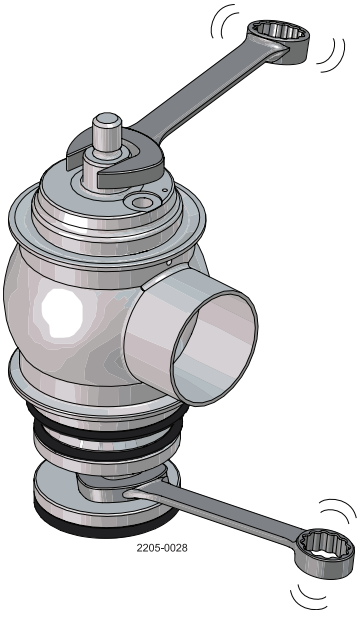

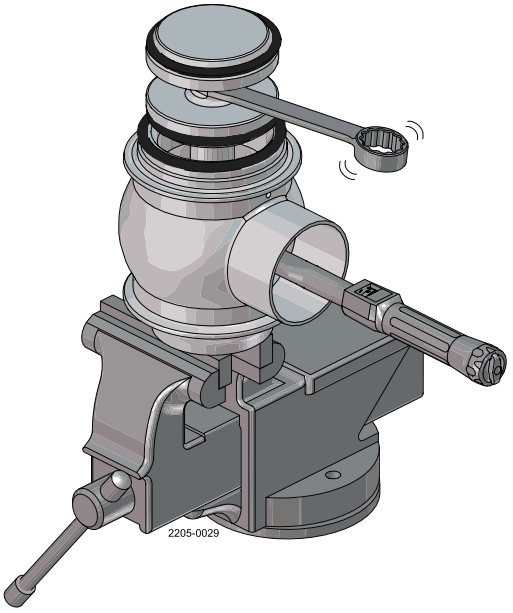

Service the valve regularly.
Study the instructions carefully and pay special attention to the warnings!
Always use Alfa Laval genuine spare parts. Always keep spare rubber seals and lip seals in stock.
Check the valve for smooth operation after servicing.

Step 6
Dismount spindle from the plug.
NOTE:
The leakage fitting in the bonnet does not need to be dismounted

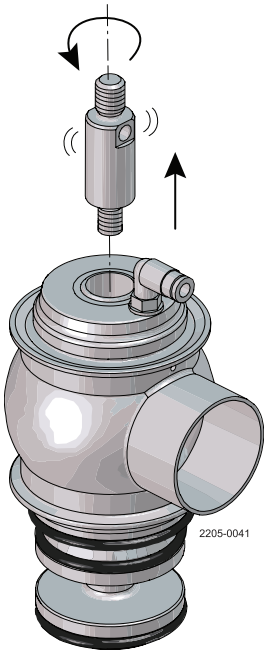

Step 7
Dismount upper valve body from the plug/seat.

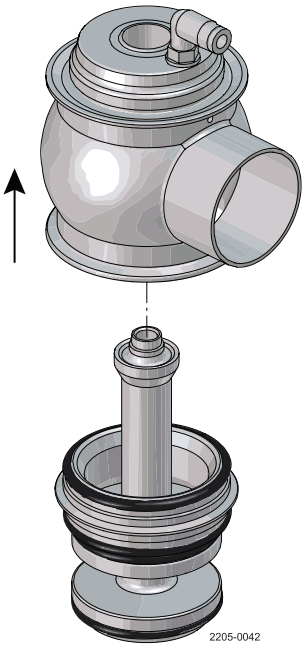

Service the valve regularly.
Study the instructions carefully and pay special attention to the warnings!
Always use Alfa Laval genuine spare parts. Always keep spare rubber seals and lip seals in stock.
Check the valve for smooth operation after servicing.

Step 8
Dismount seat from the plug.
Remember to replace o-rings in the seat and the plug.

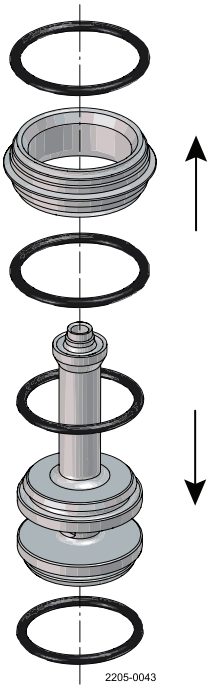

Step 9
Remove bonnet from upper valve body.
To do this - use the plug to press the bonnet out of the valve.
Remove the seat from the plug. Place the plug in the upper valve body and press down on upper valve body until bonnet is loose.
Be careful not to damage the plug.

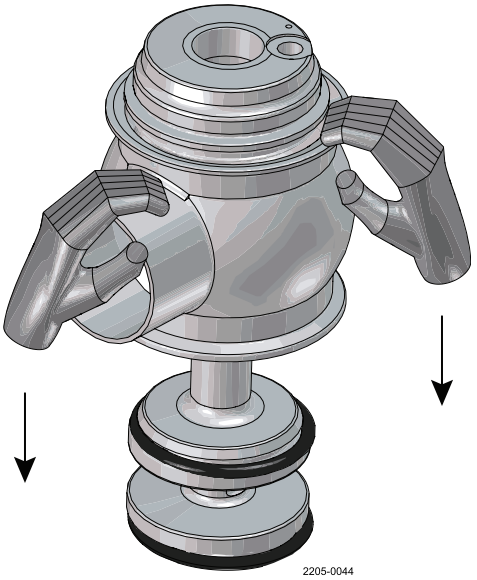

Step 10
NOTE!
It is also possible to use a screw driver between the bonnet and valve. There is an “opening” marked in the bonnet where the screw driver can be fitted.

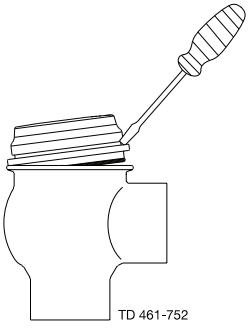

Service the valve regularly.
Study the instructions carefully and pay special attention to the warnings!
Always use Alfa Laval genuine spare parts. Always keep spare rubber seals and lip seals in stock.
Check the valve for smooth operation after servicing.

Step 11
Dismount bonnet and diaphragm

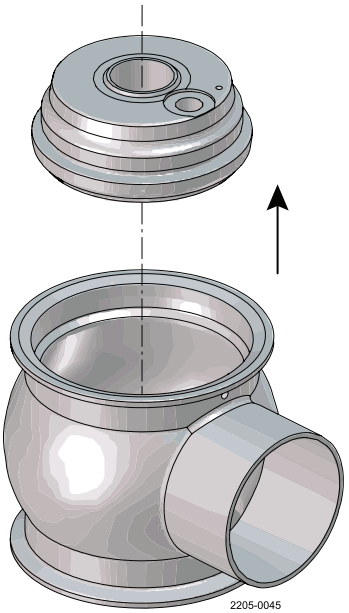

Step 12
Replace the diaphragm.
It is important that the flat side of the disc is upwards.
The bushing (24) in the bonnet can be changed, if necessary.

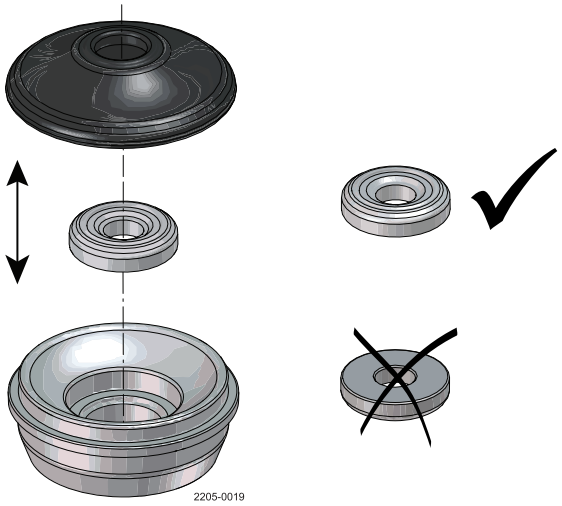

Service the valve regularly.
Study the instructions carefully and pay special attention to the warnings!
Always use Alfa Laval genuine spare parts. Always keep spare rubber seals and lip seals in stock.
Check the valve for smooth operation after servicing.

5.4 Plug seal replacement

Step 1

1. Remove old seal ring using a knife, screwdriver or similar.
   Be careful not to damage the plug surface.
   If using a screwdriver it must be placed underneath the plug groove (see drawing 1).
2. Grease the new seal ring with Paralique GTE 703, which is included in the service kit.
   Only use a very small amount of grease.
3. Fit the seal ring on the plug without pressing it into the groove.
   Be careful not to twist the seal ring.
   Use a screwdriver (two turns) to fit the seal ring properly and to ensure it is not twisted (see drawing 2).
4. The seal ring can now be mounted by hand or with the Alfa Laval plug tool.

Drawing 1

It is important to place the screwdriver underneath the plug.

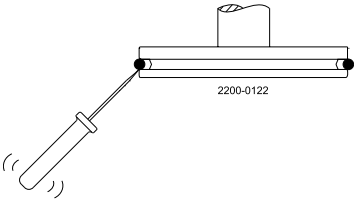

Drawing 2

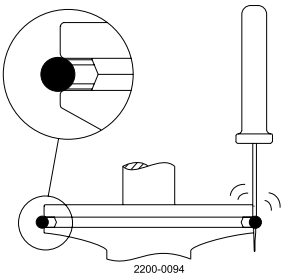

Service the valve regularly.
Study the instructions carefully and pay special attention to the warnings!
Always use Alfa Laval genuine spare parts. Always keep spare rubber seals and lip seals in stock.
Check the valve for smooth operation after servicing.

Step 2
Mounting plug seal ring by hand

1. Check the seal ring is premounted as described in step 1.
   To ensure correct mounting, press with your thumb on the seal ring, which must be done approximately 10 times and always with opposite pressure points, from A to B, to C and D (see drawing 3).
   The rest of the seal ring can now be pressed into the groove so the whole seal ring is mounted. Check that there are NO "bulge" (see drawing 4).
   If there is a little bulge – then use the screwdriver to eliminate the bulge.
   Again press with the thumb on the seal ring and keep the pressure while rotating 360° (see drawing 3).
2. It is important to release compressed air behind the seal ring. This is done with a screwdriver and always underneath the plug as shown.
   It must be done at one or two different points on the circumference.
   Be careful not to make marks on the surface of the plug and seal ring (see drawing 5).

Drawing 3

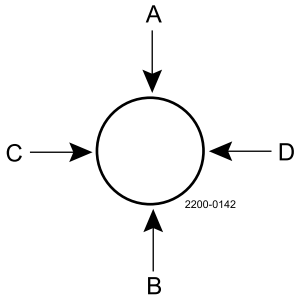

Drawing 4

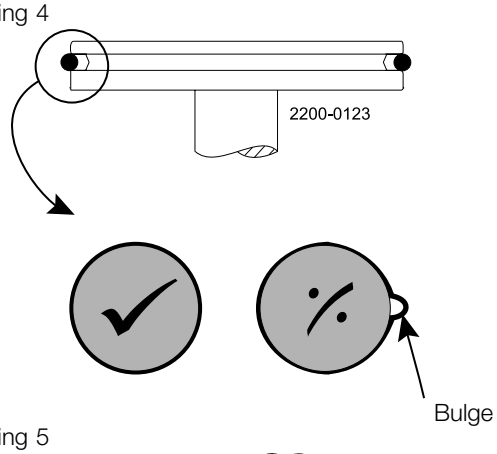

Drawing 5

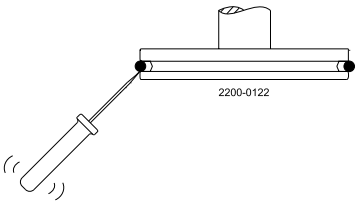

Service the valve regularly.
Study the instructions carefully and pay special attention to the warnings!
Always use Alfa Laval genuine spare parts. Always keep spare rubber seals and lip seals in stock.
Check the valve for smooth operation after servicing.

Step 3
Mounting plug seal ring with Alfa Laval plug seal tool

Mounting tool for elastomer plug seals	DN25 25 mm	DN40 38 mm	DN50 - DN65 51 mm - 63.5 mm	DN80 - DN100 76.1 mm - 101.6 mm
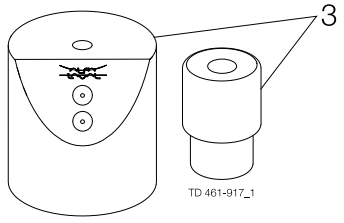	9614060001	9614060002	9614060003	9614060004

1. **Part B**
   "Part B" has a small and a large diameter as the tool can be used for two plug sizes – e.g. plug tool = 9614060003 can be used for DN50/ISO51 (small) and DN65/ISO63 (large).
   "Part B" therefore has to be turned so it matches the plug size diameter.
2. **Part A**
   "Part A" has an upper and lower exhaust hole, as the tool can be used for two plug sizes – e.g. plug tool = 9614060003.
   The upper exhaust hole is for the small plug size e.g. DN50/ISO51 (small) and the lower exhaust hole is for DN65/ISO63 (large).
   When using a "change-over plug" the spindle must also be fitted in "part A" and "part B" (see drawing 2).
   When using a "standard shut-off plug" the spindle is only fitted in "part B" (see drawing 1).
3. Fit the plug spindle in "part B" or "part A".
   Place "part A" onto "part B" and then press "hard" down on top of "part A".
   Now fit the screwdriver into the exhaust hole and underneath the plug groove meanwhile keeping the pressure on "part A".
   This should ensure correct removal of air behind the seal ring. Normally the sound "Psst" can be heard one time (see drawing 3).
   A "drill press" can of course also be used to press down on "part A".
4. It is important to release compressed air behind the seal ring. This is done with a screwdriver and always underneath the plug as shown (see drawing 4).

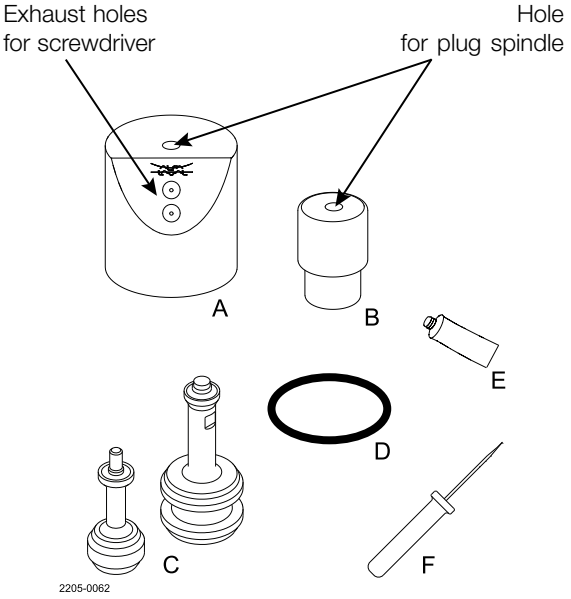

A. Part A
B. Part B
C. Plugs
D. O-ring
E. Grease Paralique GTE703 from service kit
F. Screwdriver (no sharp corner)

Service the valve regularly.
Study the instructions carefully and pay special attention to the warnings!
Always use Alfa Laval genuine spare parts. Always keep spare rubber seals and lip seals in stock.
Check the valve for smooth operation after servicing.

Drawing 1

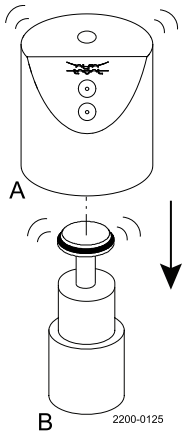

Drawing 2

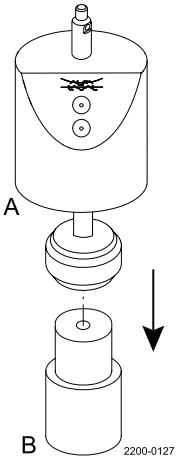

Drawing 3

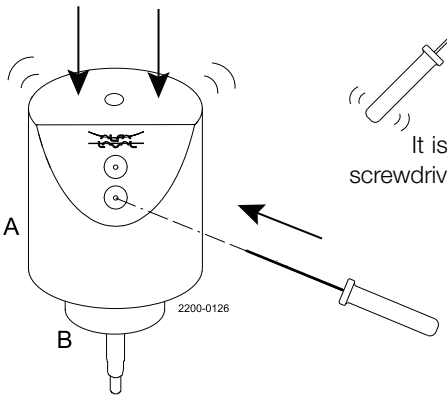

Drawing 4

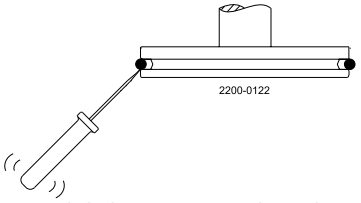

It is important to place the screwdriver underneath the plug.

5.5 Assembly of shut-off valve

Step 1
Before mounting all parts must be cleaned

A. Actuator
B. Spindel
C. Bonnet
D. Disc
E. Diaphragm
F. Plug

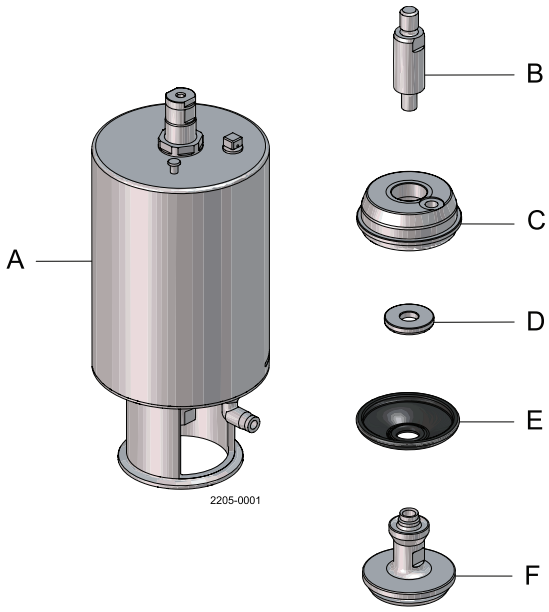

Service the valve regularly.
Study the instructions carefully and pay special attention to the warnings!
Always use Alfa Laval genuine spare parts. Always keep spare rubber seals and lip seals in stock.
Check the valve for smooth operation after servicing.

Step 2
Mount a new diaphragm.

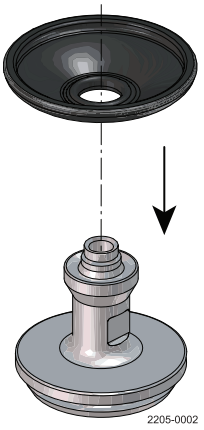

Step 3
Fit disc on plug.
It is important that the flat side of the disc is upwards.

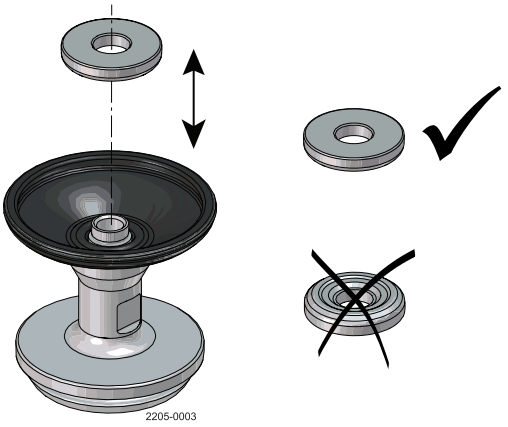

Step 4
Mount spindle.

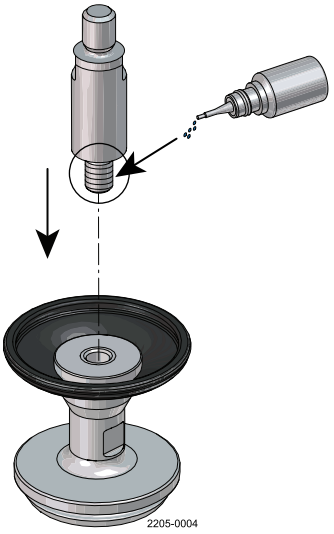

Service the valve regularly.
Study the instructions carefully and pay special attention to the warnings!
Always use Alfa Laval genuine spare parts. Always keep spare rubber seals and lip seals in stock.
Check the valve for smooth operation after servicing.

Step 5
Tighten spindle and plug with:
- 2”/DN50 - 4”/DN100 with Torque = 33 Nm
- 1”/DN25 - 1½”/DN40 with Torque = 17 Nm

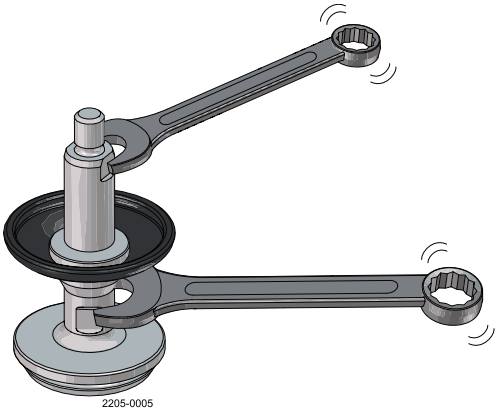

Step 6
We strongly recommend to use some water to “grease” on the bonnets round edge, before mounting the diaphragm. This makes it much easier to mount diaphragm correctly.

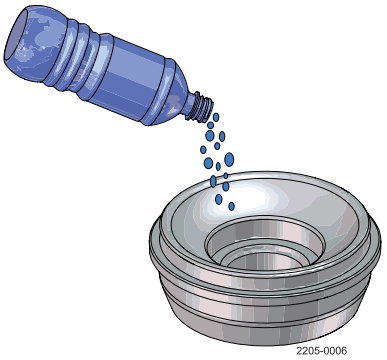

Step 7
Mount bonnet on spindle and fit diaphragm. Press only with the fingers to avoid scrates on diaphragm. Be sure that diaphragm is correctly fitted on the “round edge” on the bonnet.

NOTE!
Make sure that the diaphragm is securely mounted on the bonnet before installing the complete diaphragm/stem into the valve body.

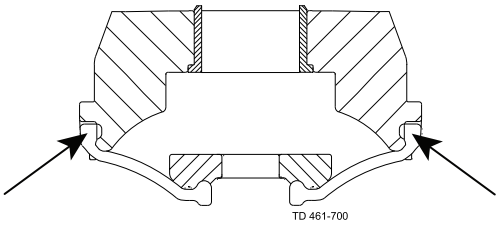

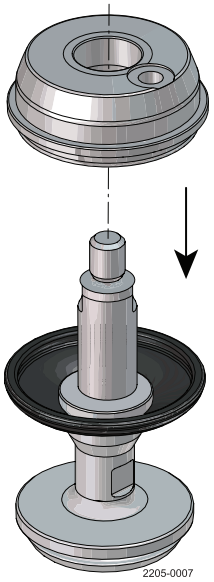

Service the valve regularly.
Study the instructions carefully and pay special attention to the warnings!
Always use Alfa Laval genuine spare parts. Always keep spare rubber seals and lip seals in stock.
Check the valve for smooth operation after servicing.

Step 8
Mount the fitting for leakage in the bonnet. Be sure the actuator stem is in lower position. Mount the assembled "plug unit" onto the actuator stem.

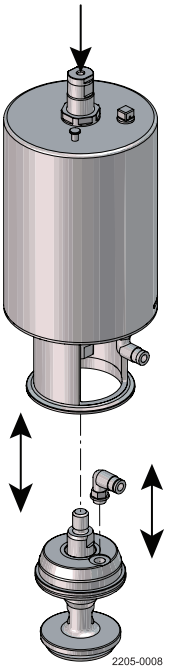

Step 9
Tighten plug and actuator with:
- 2”/DN50 - 4”/DN100 with Torque = 33 Nm
- 1”/DN25 - 1½”/DN40 with Torque = 17 Nm

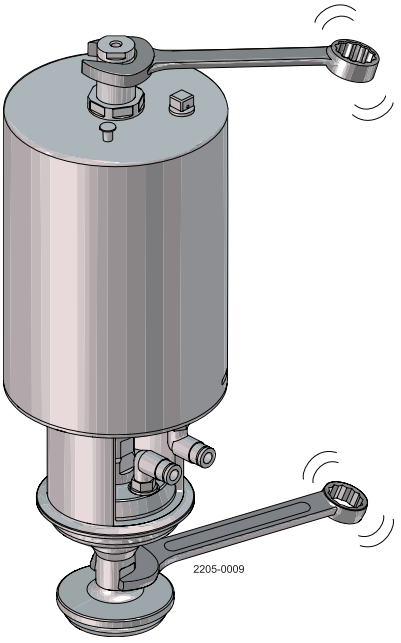

Service the valve regularly.
Study the instructions carefully and pay special attention to the warnings!
Always use Alfa Laval genuine spare parts. Always keep spare rubber seals and lip seals in stock.
Check the valve for smooth operation after servicing.

Step 10
Before mounting bonnet/diaphragm into valve body use grease (Paraliq GTE 703) on sealing surface. This will reduce friction when diaphragm is pressed into the valve body.
Make sure that the actuator stem is in lower position, as this makes it easiest to fit diaphragm into the valve body.
Mount actuator type “NC” without air pressure.
Mount actuator type “NO” with air pressure.

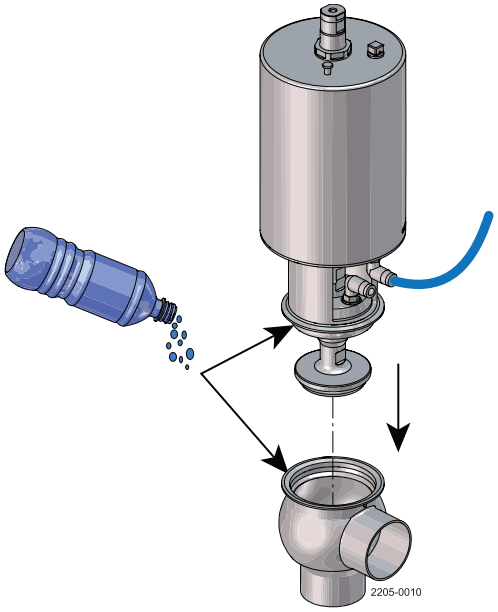

Step 11
Ensure that the actuator stem is still in lower position.
Then press hard on top of the actuator to fit the bonnet/diaphragm in the valve body.
There is a “big” gab opening, but diaphragm is now placed into the valve body.
NOTE!
There is a “big” gap, but diaphragm is now placed into the valve body.

* = Big gap

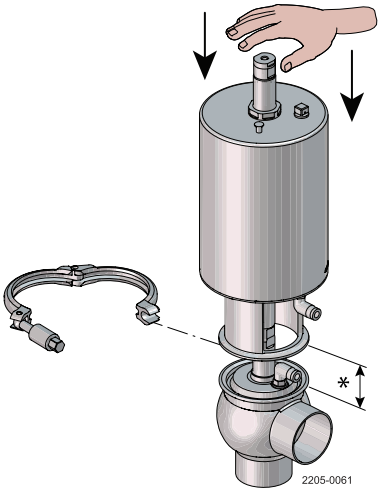

Step 12
Now move the actuator stem in top position and press **HARD** on top of the actuator to reduce the gap to approx. 1 mm.

Service the valve regularly.
Study the instructions carefully and pay special attention to the warnings!
Always use Alfa Laval genuine spare parts. Always keep spare rubber seals and lip seals in stock.
Check the valve for smooth operation after servicing.

Step 13
Mount the clamp (make sure it is located correctly).
Tighten with a 10mm spanner. Torque = 10-12 Nm.
Grease the thread with Molykote.
Place a hose in the fitting in the sealing element (hole for leakage detection).

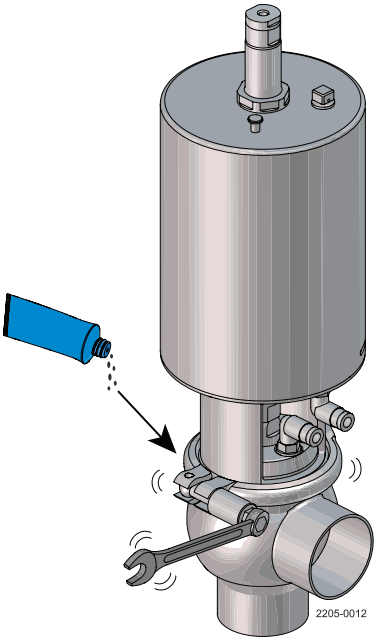

Service the valve regularly.
Study the instructions carefully and pay special attention to the warnings!
Always use Alfa Laval genuine spare parts. Always keep spare rubber seals and lip seals in stock.
Check the valve for smooth operation after servicing.

5.6 Assembly of change-over valve

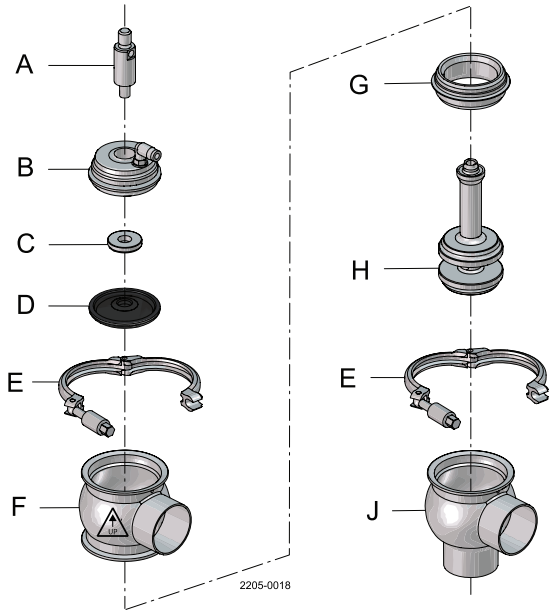

A = Spindle
B = Bonnet
C = Disc
D = Diaphragm
E = Clamp
F = Upper valve body
G = Seat
H = Change-over plug
J = Lower valve body

Step 1
We recommend to use some water to "grease" on the bonnets round edge, before mounting the diaphragm. This makes it much easier to mount diaphragm correctly.

Step 2
Mount the disc in the bonnet, with the plane disc side towards the bonnet bushing. It is important that the flat side of the disc is upwards.

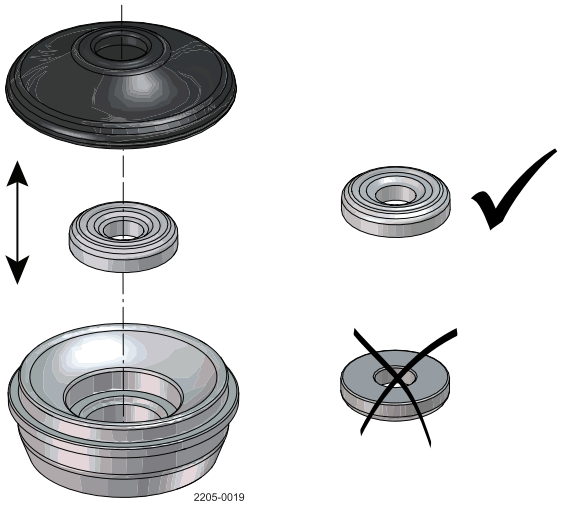

Service the valve regularly.
Study the instructions carefully and pay special attention to the warnings!
Always use Alfa Laval genuine spare parts. Always keep spare rubber seals and lip seals in stock.
Check the valve for smooth operation after servicing.

Step 3
Fit diaphragm to the bonnet. Press only with the fingers so no scratch comes on the diaphragm as this might result in leakage. Be sure that the diaphragm is fitted correctly on the "round edge" on the bonnet.

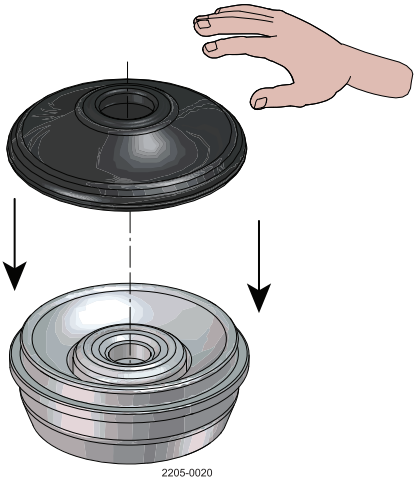

Step 4
We strongly recommend to use grease (Paraliq GTE 703) on the edges of the upper valve body to ensure that the diaphragm is mounted correctly. The sealing surface must be clean to avoid leakage.

Step 5
Mount bonnet and diaphragm (disc inside) into upper valve body.

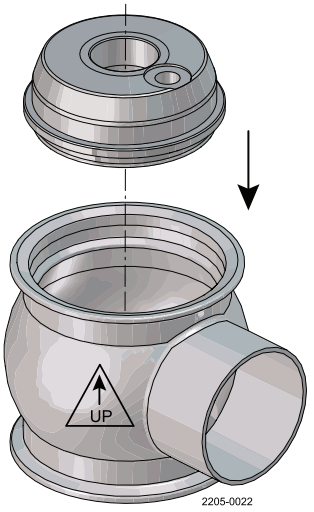

Service the valve regularly.
Study the instructions carefully and pay special attention to the warnings!
Always use Alfa Laval genuine spare parts. Always keep spare rubber seals and lip seals in stock.
Check the valve for smooth operation after servicing.

Step 6
Remember to position valve body with the ø2 hole upwards. Press hard on the bonnet to fit it in the upper valve body.

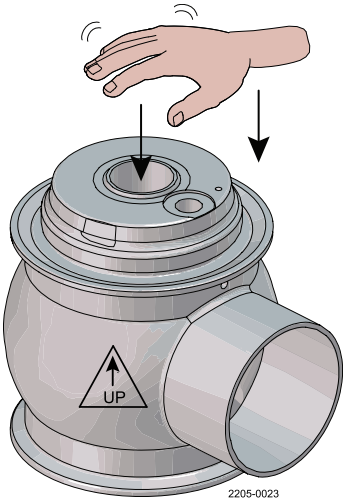

Step 7
Place the seat on the plug. Remember to mount new O-rings in the seat and plug.

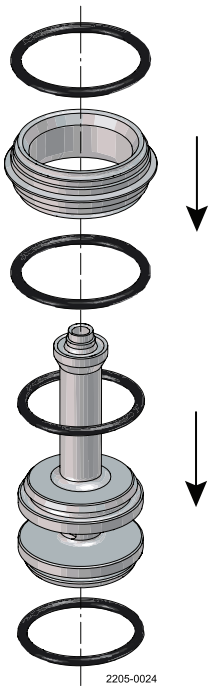

Service the valve regularly.
Study the instructions carefully and pay special attention to the warnings!
Always use Alfa Laval genuine spare parts. Always keep spare rubber seals and lip seals in stock.
Check the valve for smooth operation after servicing.

Step 8
Use a little amount of "Loctite 243" on the plug treat. Be careful not to spill a drop outsidethe threaded hole, as this will glue the disc and plug together. (This can make it difficult to dismount the valve next time service is carried out.)

Step 9
Mount upper valve body onto the plug/seat.

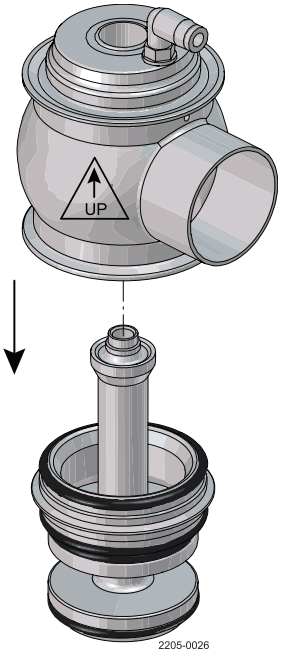

Service the valve regularly.
Study the instructions carefully and pay special attention to the warnings!
Always use Alfa Laval genuine spare parts. Always keep spare rubber seals and lip seals in stock.
Check the valve for smooth operation after servicing.

Step 10
Assemble spindle and plug. Be sure that the disc is placed correctly on the plug while screwing spindle and plug together.
Remember to mount the leakage fitting in the bonnet!

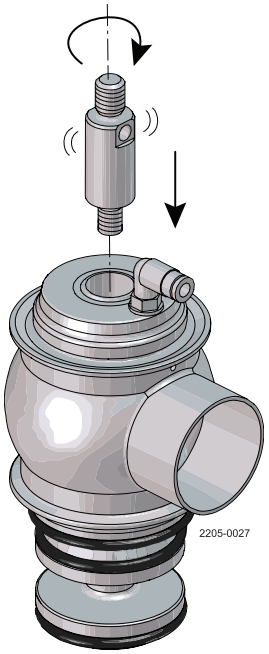

Step 11
Tighten the spindle and plug. Use 17 mm spanners.
It is easiest to use a vice.
Tighten valve size 2"/DN50 - 4"/DN100 with Torque = 33 Nm
Tighten valve size 1"/DN25 - 1½"/DN40 with Torque = 17 Nm

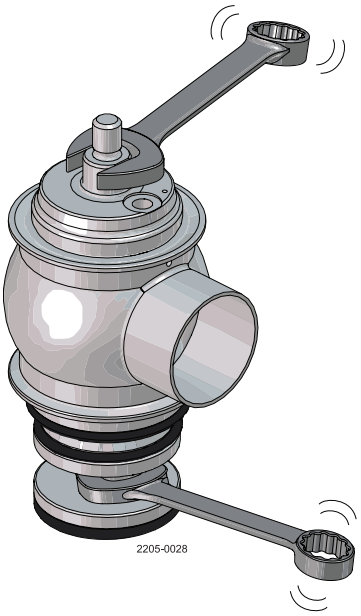

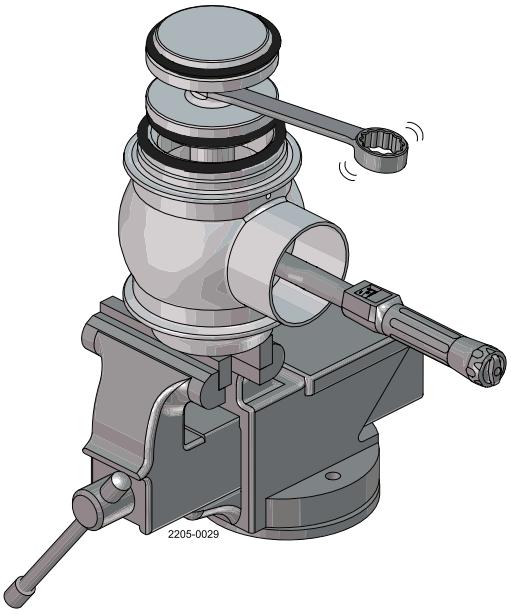

Service the valve regularly.
Study the instructions carefully and pay special attention to the warnings!
Always use Alfa Laval genuine spare parts. Always keep spare rubber seals and lip seals in stock.
Check the valve for smooth operation after servicing.

Step 12
Ensure that the actuator stem is in lower position.
Tighten the valve body/plug together with the actuator.
Activate the actuator, if is it a NO version, so the actuator stem moves downwards to ensure right mounting.

DANGER!
Finger cut at “bonnet” and “uper valve body”.

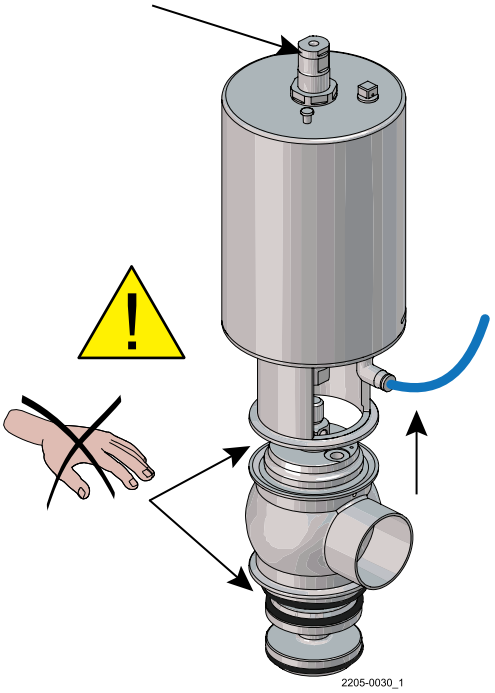

Step 13
Tighten the actuator stem and plug. Use 17 mm spanners.
Tighten valve size 2"/DN50 - 4"/DN100 with Torque = 33 Nm.
Tighten valve size 1/DN25 - 1½"/DN40 with Torque = 17 Nm.

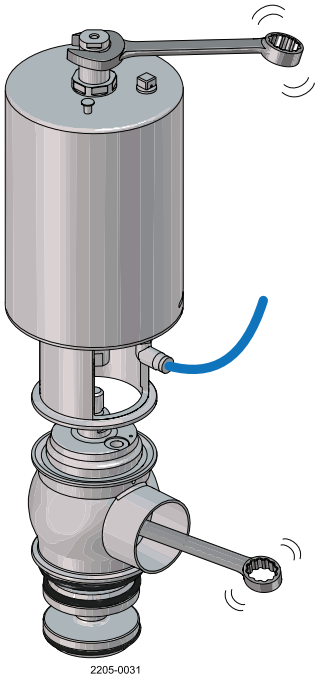

Service the valve regularly.
Study the instructions carefully and pay special attention to the warnings!
Always use Alfa Laval genuine spare parts. Always keep spare rubber seals and lip seals in stock.
Check the valve for smooth operation after servicing.

Step 14
Align upper valve body and actuator if necessary. This is done by rotating the valve body only clockwise (only the valve body can rotate as diaphragm is locked).

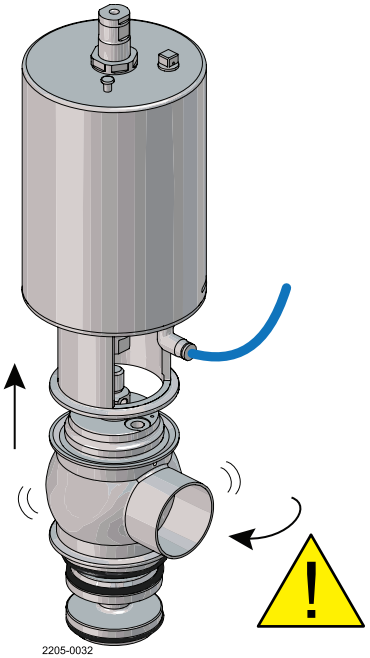

Step 15
Ensure that the actuator stem is in upper position.
DANGER!
Finger cut at "bonnet" and "seat ring"

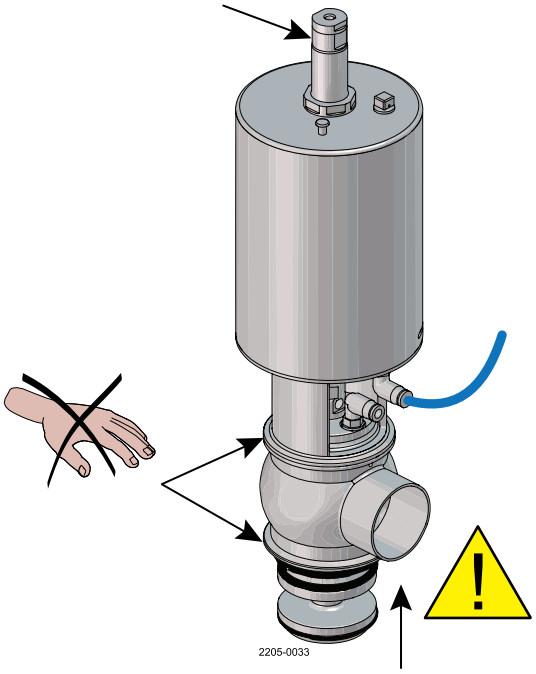

Service the valve regularly.
Study the instructions carefully and pay special attention to the warnings!
Always use Alfa Laval genuine spare parts. Always keep spare rubber seals and lip seals in stock.
Check the valve for smooth operation after servicing.

Step 16

CORRECT assembling and disassembling to avoid destroying (stretching) diaphragm

IMPORTANT!
The mechanical stop is in lower body.
To adoid overstretching the diaphragm the lower boby clamp must not be loosened before the upper body clamp.

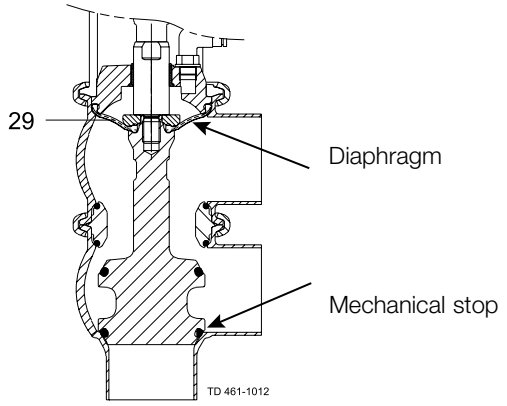

Recommended spare parts
Service kits (see section 7 Parts list and service kits)

Upper clamp

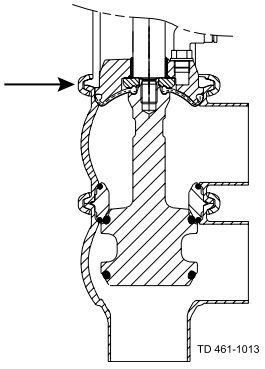

Place the plug in upper position and loosen the upper clamp.

INCORRECT assembling and disassembling of Unique SSV Aseptic change-over valve

Upper clamp still mounted, which is wrong

Lower clamp dismounted

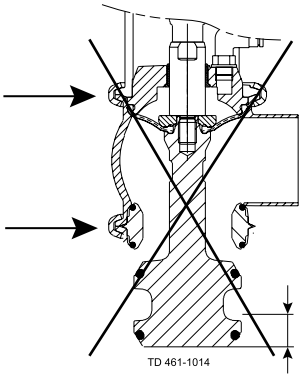

The plug is overstretching the diaphragm as it moves 10 mm further downwards

Service the valve regularly.
Study the instructions carefully and pay special attention to the warnings!
Always use Alfa Laval genuine spare parts. Always keep spare rubber seals and lip seals in stock.
Check the valve for smooth operation after servicing.

Step 17
Mount lower valve body, but remember to align with upper valve body, before tightening the lower clamp. Then tighten **LOWER** clamp with torque M = 10-12 Nm.
IMPORTANT:
Remember always to fit the **LOWER** clamp first and the upper clamp as the last one to avoid damaging the diaphragm (also see Step 16).

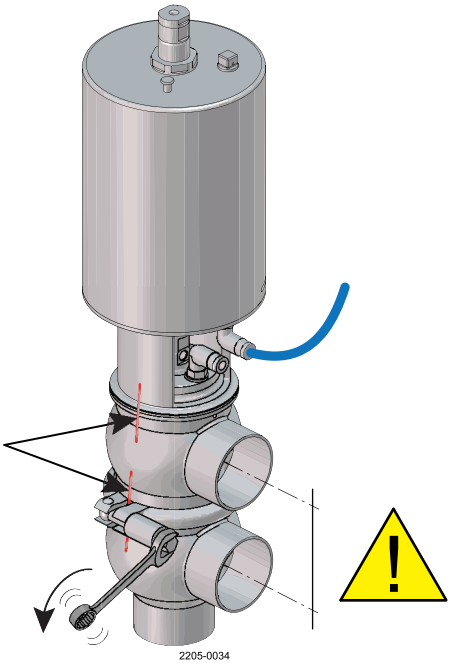

Step 18
Now mount upper clamp and tighten - Torque = 10-12 Nm.
IMPORTANT!
Please remember **NOT** to dismount the lower clamp unless plug stays in the upper position, as diaphragm will be destroyed if plug moves downwards (also see Step 16).

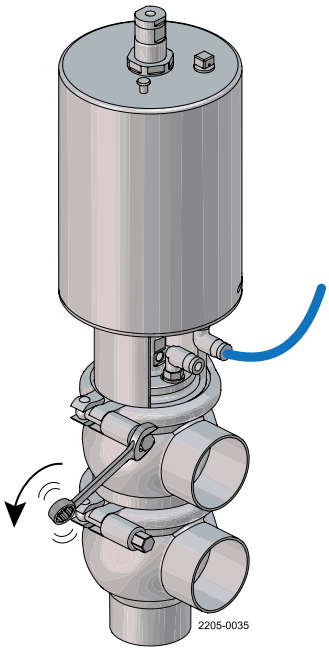

Service the valve regularly.
Study the instructions carefully and pay special attention to the warnings!
Always use Alfa Laval genuine spare parts. Always keep spare rubber seals and lip seals in stock.
Check the valve for smooth operation after servicing.

Step 19
If the upper valve body has to be rotated remember **ALWAYS** to start with dismounting the upper clamp.
IMPORTANT!
Please remember **NOT** to dismount the lower clamp unless plug stays in the upper position, as diaphragm will be destroyed if plug moves downwards. (see also step 16).

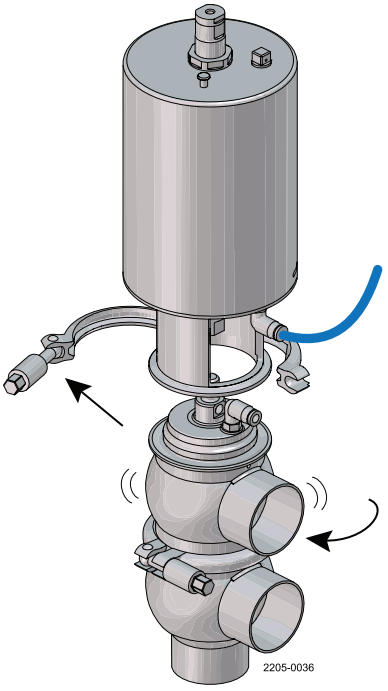

Service the valve regularly.
Study the instructions carefully and pay special attention to the warnings!
Always use Alfa Laval genuine spare parts. Always keep spare rubber seals and lip seals in stock.
Check the valve for smooth operation after servicing.

5.7 Actuator types

Different actuator types for the SSV valve
In June 2016 the below change was implemented and the “removable yoke with bolts” version is thereby phased out and replaced by the “yoke without bolts” version.

NOTE
It is important to check for warnings marked on the actuator when servicing an actuator - see below table.

Actuator type	**Non-maintainable actuator** Spring under load and **CANNOT** be opened 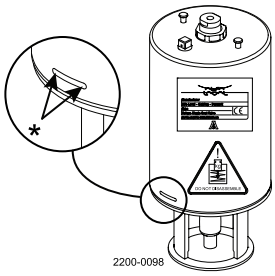 *) Lock wire opening is locked, when warning is marked on actuator	**Fully maintainable actuator** Spring cage and can be opened 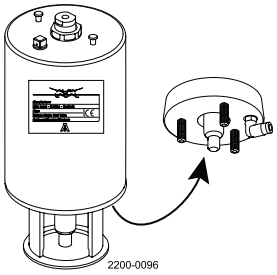 	**Fully maintainable actuator** Spring cage and can be opened 
Yoke type	Non-removable yoke	“Removable yoke with bolts”. If the yoke with bolts is damaged it has to be replaced by the “yoke without bolts”	“Yoke without bolts”
Service	Not possible to service internally (it is not possible to change piston o-rings)	Yes	Yes
Marked with warnings	Yes	No	No
Year of production	From 2006	From 2006 to June 2016	From June 2016

Study the instructions carefully.
The items refer to the parts list and service kits section. Handle scrap correctly.
A/A = Air/air activated.
Service tool: see spare parts.

5.8 Actuator bushing replacement (non-maintainable actuator)

If the actuator is marked with a danger warning, do **NOT** attempt to cut the actuator open.

Do **NOT** attempt to disassemble the actuator due to spring under load danger!

Do **NOT** attempt to cut the actuator open due to spring under load danger!

Step 1
Introduction
- The actuator service kit contains two bushings and four O-rings.
- Mount the thick O-ring inside and the thin O-ring outside the bushing.
- Always lubricate the spindle and O-rings thoroughly with “Molykote Longterm 2 Plus” before mounting the new bushings.

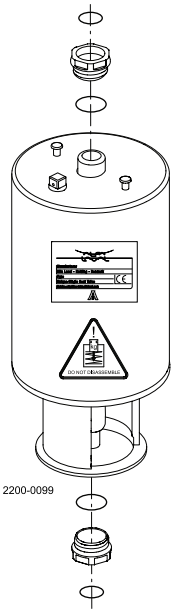

Study the instructions carefully.
The items refer to the parts list and service kits section. Handle scrap correctly.
A/A = Air/air activated.
Service tool: see spare parts.

Step 2
Introduction - Standard socket wrench
Use a 27 mm socket wrench to mount the bushings, as the space in the yoke is limited.
A socket wrench 24x27 (length = 185 mm) is a standard tool, which can be purchased from all tool shops.

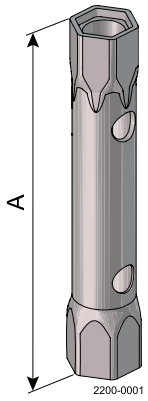

A = 185 mm

Example:
Socket wrench - 24x27 mm
Supplier: Gedore Tool
EAN4010886621264

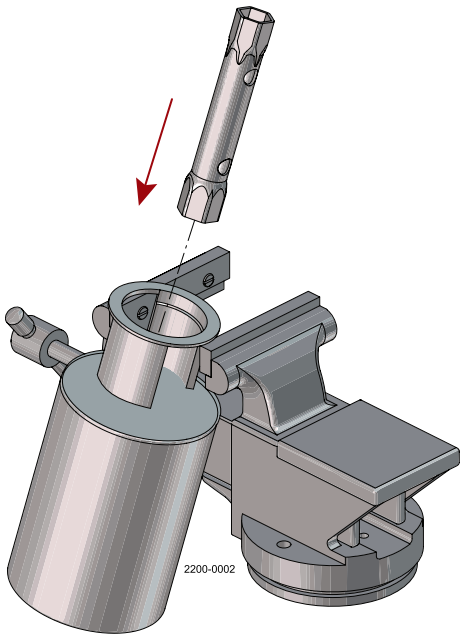

Step 3
Introduction - Aligning spindle
The actuator spindle can in some cases be forced off centre by the internal spring, see drawing below.
In these cases, the alignment spindle shown below, together with the socket wrench, is a great help and ensures a reliable mounting of the bushing. The spindle can either be purchased from Alfa Laval together with the socket wrench (**9614-1984-01**) or it can be manufactured locally using the below dimensions.

Spindle forced off centre by spring inside actuator

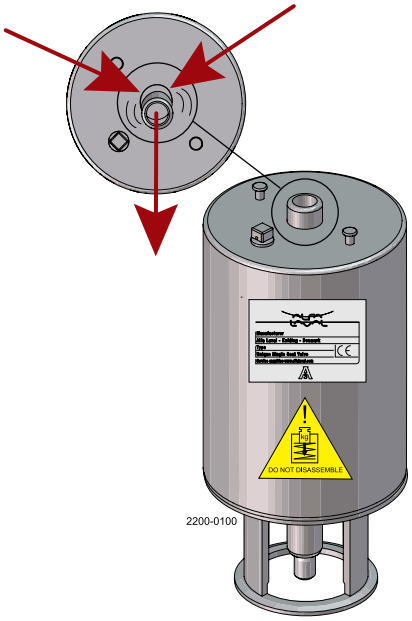

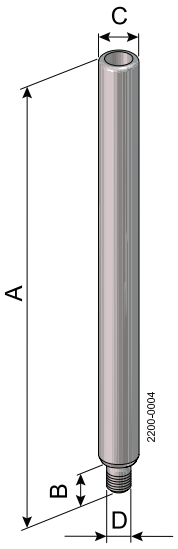

A = 280 mm
B = 16 mm
C = Rod ø20 mm
D = M12 x 1.5

Study the instructions carefully.
The items refer to the parts list and service kits section. Handle scrap correctly.
A/A = Air/air activated.
Service tool: see spare parts.

Step 4

The actuator must be carefully fixed in a vice if it is dismounted from the valve. Be careful not to press the yoke flange oval when fixing the actuator in the vice. Only fix carefully on the “yoke leg” as shown below.

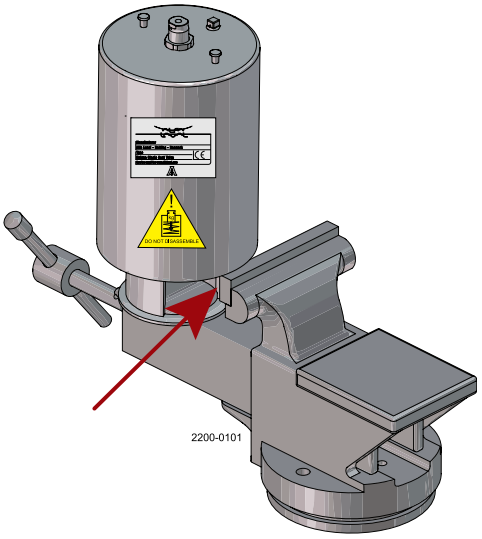

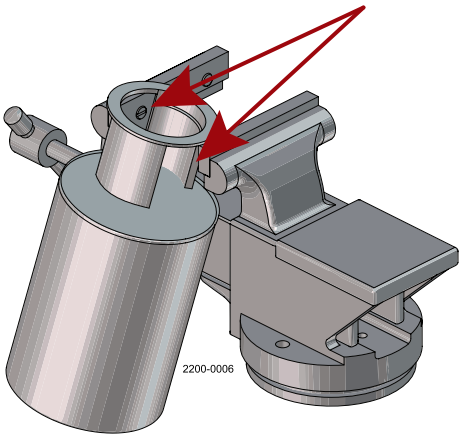

Step 5

Remove adapter screw.
(After spindle alignment the adapter screw has to be remounted.)

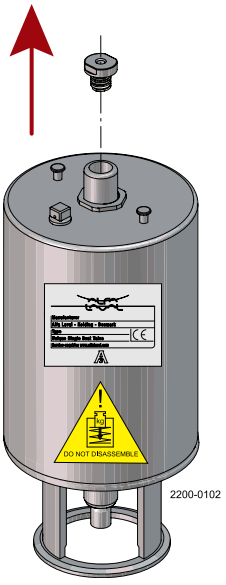

Study the instructions carefully.
The items refer to the parts list and service kits section. Handle scrap correctly.
A/A = Air/air activated.
Service tool: see spare parts.

Step 6

1. Lubricate thoroughly both the actuator spindle and O-rings.
2. Grease with “Molykote Longterm 2 plus”.
3. Fit the **bushing** on the spindle.

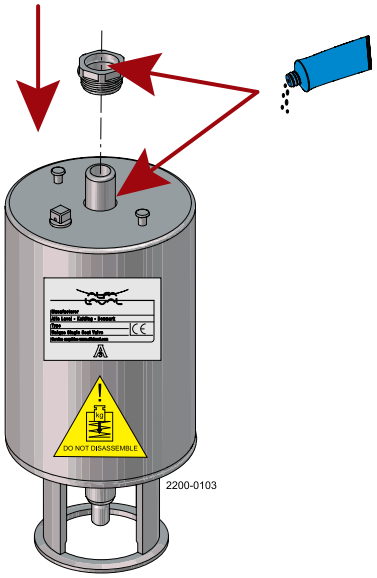

Step 7

Fit the aligning spindle to the actuator spindle, and then mount the socket wrench.

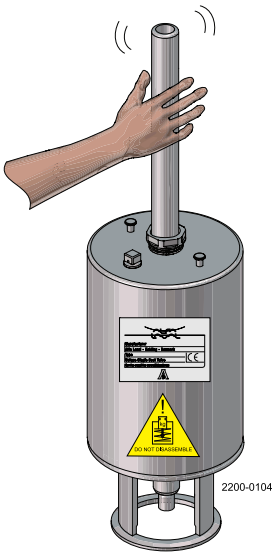

Aligning spindle

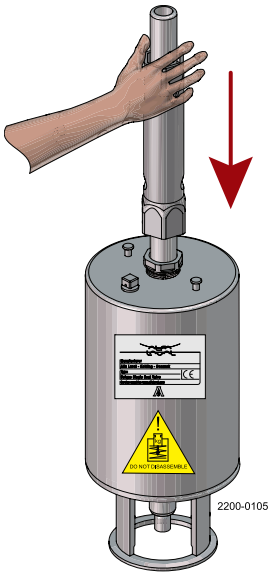

Socket wrench

Study the instructions carefully.
The items refer to the parts list and service kits section. Handle scrap correctly.
A/A = Air/air activated.
Service tool: see spare parts.

Step 8

Now pull the aligning spindle to centre the actuator spindle. In this position rotate the **bushing** 180° backwards and then begin to fasten the bushing. Make sure that the thread catches evenly!
The bushing must only be tightened with a torque of 10 Nm which can be done by turning “hard” by hand.

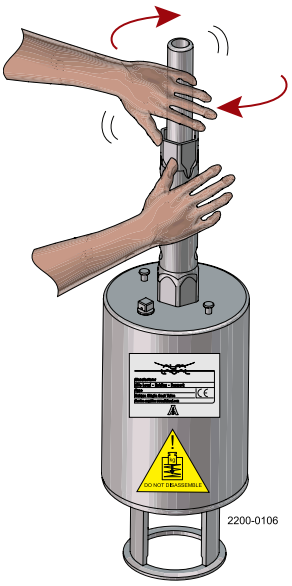

Study the instructions carefully.
The items refer to the parts list and service kits section. Handle scrap correctly.
A/A = Air/air activated.
Service tool: see spare parts.

5.9 Dismantling of fully maintainable actuator (removable yoke with bolts/2006–June 2016)

If the actuator is marked with a danger warning, do **NOT** attempt to cut the actuator open.
See also section 5.7 Actuator types

Do **NOT** attempt to disassemble the actuator due to spring under load danger!

Do **NOT** attempt to cut the actuator open due to spring under load danger!

Before dismantling check that the actuator not is marked with a warning.

1. Rotate cylinder.
2. Remove lock wire and pull away cylinder.
3. Unscrew nuts and remove yoke.
4. Top and bottom bushings.
5. Remove piston with O-ring and spring assembly.
6. Remove O-rings and support disc.

Note! The A/A actuator has no spring assembly.

Rotate cylinder with service tool.

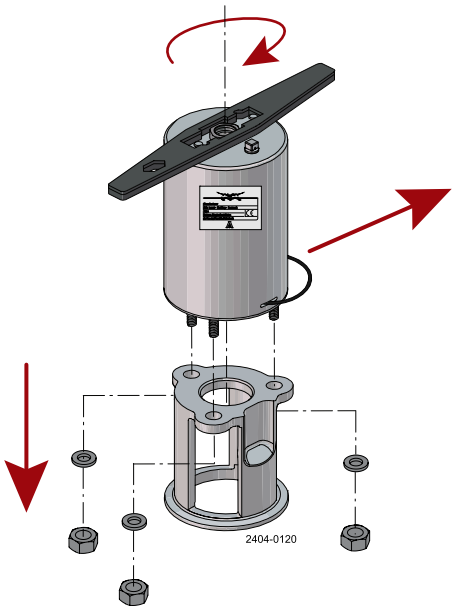

5 Maintenance

Study the instructions carefully.
The items refer to the parts list and service kits section. Handle scrap correctly.
A/A = Air/air activated.
Service tool: see spare parts.

5.10 Dismantling of fully maintainable actuator (yoke without bolts/June 2016 ->)

If the actuator is marked with a danger warning, do **NOT** attempt to cut the actuator open.
See also section 5.7 Actuator types

Do **NOT** attempt to disassemble the actuator due to spring under load danger!

Do **NOT** attempt to cut the actuator open due to spring under load danger!

Before dismantling check that the actuator not is marked with a warning.

1. Rotate cylinder.
2. Remove lock wire and pull away cylinder.
3. Remove top and bottom bushings.
4. Remove piston with O-ring and spring assembly.

Rotate cylinder with service tool.

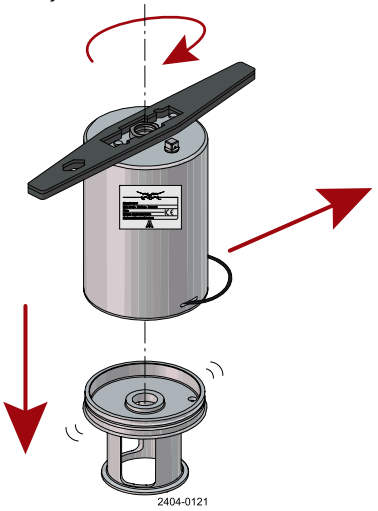

5.11 Mounting of fully maintainable actuator

Depending on type of actuator choose step 1 or step 2.

Step 1
Reverse order of 5.9 Dismantling of fully maintainable actuator (removable yoke with bolts/2006-June 2016)
Tighten nuts to a torque of 17 Nm and be careful not to overtightened.
Lubricate O-rings (3, 7, 11) with Molykote Longterm 2 plus before fitting.
Tighten bushings with a torque = 10 Nm and be careful not to overtightend. See also 5.8 Actuator bushing replacement (non-maintainable actuator)

Step 2
Reverse order of 5.10 Dismantling of fully maintainable actuator (yoke without bolts/June 2016 ->)
Lubricate O-rings (3, 7, 11) with Molykote Longterm 2 plus before fitting.
Tighten bushings with a torque = 10 Nm and be careful not to overtightened. See also 5.8 Actuator bushing replacement (non-maintainable actuator)

Study the instructions carefully.
The items refer to the parts list and service kits section. Handle scrap correctly.
A/A = Air/air activated.
Service tool: see spare parts.

5.12 Changing pneumatic movement on fully maintainable actuator (NC/NO)

If the actuator is marked with a danger warning, do **NOT** attempt to cut the actuator open.
See also section 5.7 Actuator types.

Do **NOT** attempt to disassemble the actuator due to spring under load danger!

Do **NOT** attempt to cut the actuator open due to spring under load danger!

Before dismantling check that the actuator not is marked with a warning.

1. Rotate cylinder.
2. Remove lock wire and pull away cylinder.
3. Reverse piston and spring assembly.
4. Reverse adapter, air fitting and plug to opposite end.
5. Reassemble in reverse order (3 to 1).

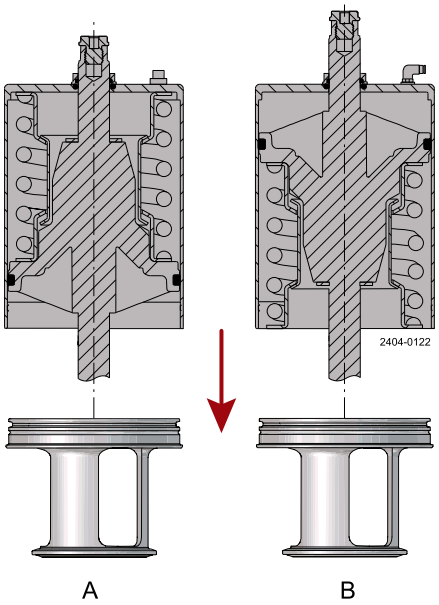

A. = Pneumatic movement - upwards (NC)
B. = Pneumatic movement - downwards (NO)

6 Technical data

It is important to observe the technical data during installation, operation and maintenance.
Inform all personnel about the technical data.

6.1 Technical data

The valve is a pneumatic seat valve in a hygienic and modular design remote-controlled by means of compressed air.

It has few and simple moveable parts which results in a very reliable valve and low maintenance cost. An integrated valve plug/diaphragm secures aseptic operation.

Standard Design The Unique SSV Aseptic valve comes in a one or two body configuration. With its module built structure it is designed for flexibility and easy customization through the electronic configurator.

Data - valve/actuator	
Max. product pressure	800 kPa (8 bar).
Min. product pressure	Full vacuum.
Max. sterilisation temperature (steam - short time)	150° C at pressure 380 kPa (3.8 bar)
Temperature range	-10° C to + 140° C (standard EPDM seal).
Air pressure, actuator	500 to 700 kPa (5 to 7 bar).
Note: Vacuum is not recommended in aseptic applications.	
Materials - valve/actuator	
Product wetted steel parts	1.4404 (316L) (internal Ra < 0.8 µm).
Other steel parts	1.4301 (304).
Plug seal	EPDM.
Diaphragm	EPDM/PTFE.
Other product wetted seals	EPDM (standard).
Optional product wetted seals	HNBR and FPM.
Other seals	NBR.

Weight (kg)

Nominal size	DN/OD						DIN/DN					
Size	**25**	**38**	**51**	**63.5**	**76.1**	**101.6**	**25**	**40**	**50**	**65**	**80**	**100**
Shut-off valve	3.1	3.3	5.6	6.6	11.5	14	3.2	3.4	5.6	6.8	11.9	13.9
Change-over valve	3.9	4.2	7.2	8.7	14.2	18.4	4.1	4.5	7.1	9	15.1	18.3

Noise
One metre away from and 1.6 metres above the exhaust the noise level of a valve actuator will be approximately 77db (A) without noise damper and approximately 72 db (A) with damper - measured at 7 bar air-pressure.

It is important to observe the technical data during installation, operation and maintenance.
Inform all personnel about the technical data.

Safety check

A visual inspection of any protective device (shield, guard, cover or other) on the supplied product shall be carried out at least every 12 months.
If the protective device is lost or damaged, especially when this leads to deterioration of safety performance, it shall be replaced.
The fixing of the protective device should only be replaced with fixings of the same or an equivalent type.

Inspection acceptance criteria:

- It should not be possible to reach moving parts originally protected by a protective device.
- The protective device must be securely mounted.
- Ensure that screws for the protective device are securely tightened.

Procedure in case of non-acceptance:

- Fix and/or replace the protective device.

The drawing shows Unique Single Seat Valve - Aseptic.
The items refer to the parts list in the following sections

7.1 Drawing

If the actuator is marked with a danger warning, do **NOT** attempt to cut the actuator open.
See also section 5.7 Actuator types

Do **NOT** attempt to disassemble the actuator due to spring under load danger!

Do **NOT** attempt to cut the actuator open due to spring under load danger!

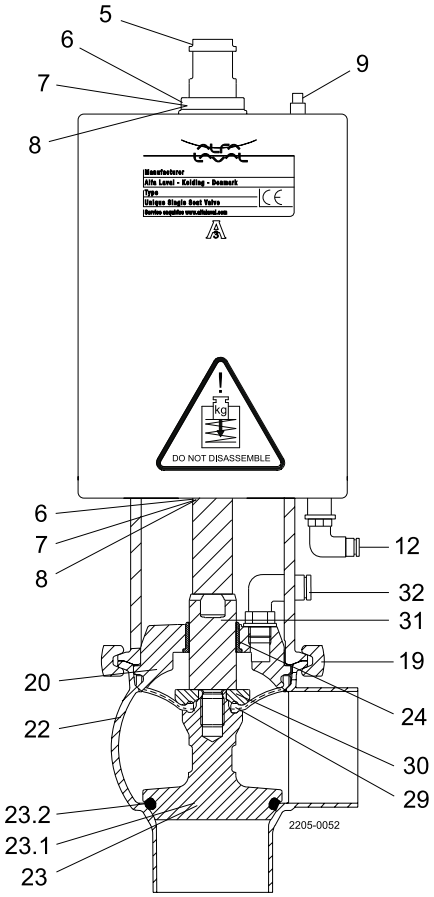

Shut-off valve

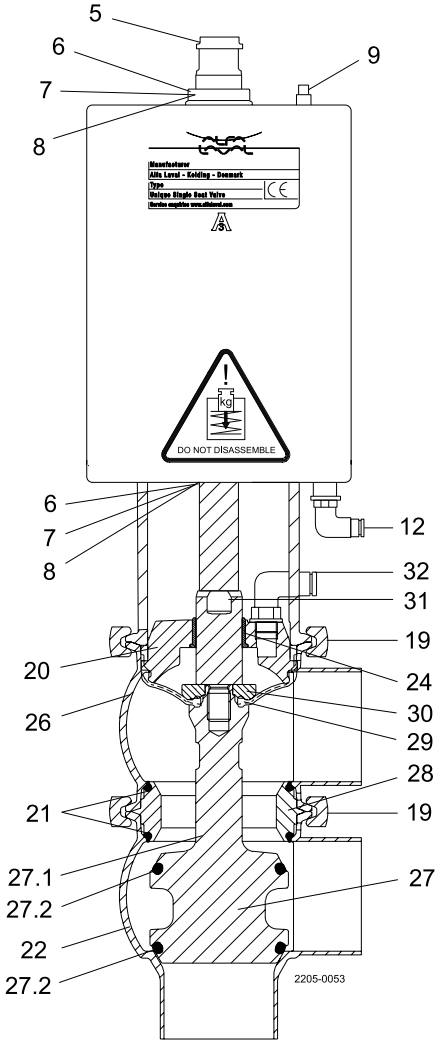

Change-over valve

7 Parts list and service kits

The drawing shows Unique Single Seat Valve - Aseptic.
The items refer to the parts list in the following sections

7.2 Shut-off valve

If the actuator is marked with a danger warning do **NOT** attempt to cut the actuator open.

Do **NOT** attempt to disassemble the actuator due to spring under load danger!

Do **NOT** attempt to cut the actuator open, due to spring under load danger!

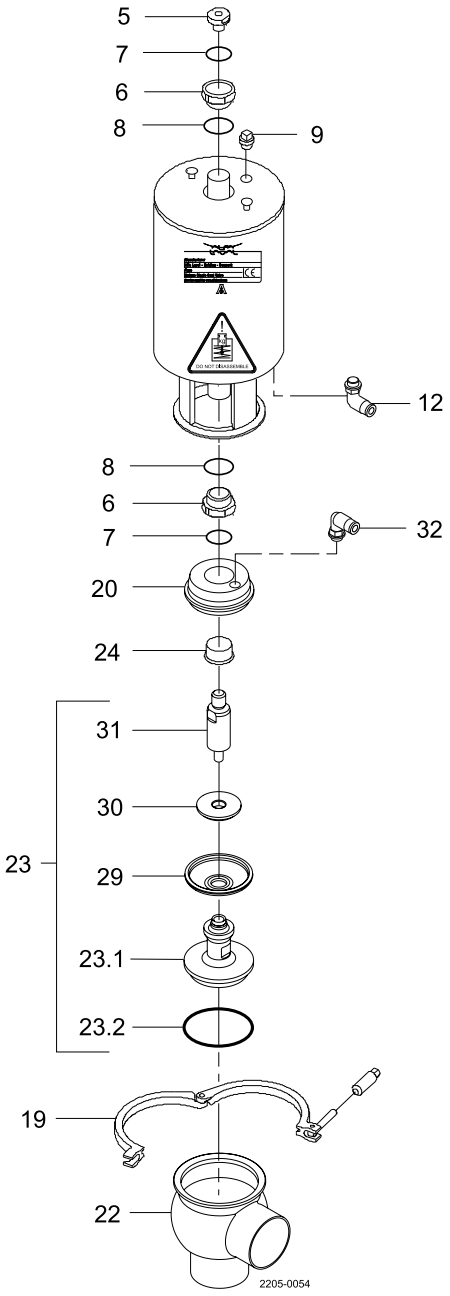

The drawing shows Unique Single Seat Valve - Aseptic.
The items refer to the parts list in the following sections

Parts list

Pos.	Qty	Denomination
5	1	Adapter
6 □	2	Bushing
7 □	2	O-ring
8 □	2	O-ring
9	1	Plug
12	1(2)	Air fitting
19	1	Clamp
20	1	Bonnet
22	1	Valve body
23	1	Plug
23.1	1	Plug
23.2 ◆	1	Plug seal
24	1	Bushing
29 ◆	1	Diaphragm
30	1	Disc for diaphragm
31	1	Upper spindle
32	1	Air fitting

Service kits

	Denomination	DN 25 25 mm	DN 40 38 mm	DN 50 51 mm	DN 65 63.5 mm	DN 80 76.1 mm	DN 100 101.6 mm
Service kit for actuator							
□	Service kit	9611926500	9611926500	9611926500	9611926500	9611926500	9611926500
Service kit for product wetted parts, standard							
◆	Service kit, EPDM	9611926543	9611926544	9611926545	9611926546	9611926547	9611926548
◆	Service kit, HNBR	9611926549	9611926550	9611926551	9611926552	9611926553	9611926554
◆	Service kit, FPM	9611926555	9611926556	9611926557	9611926558	9611926559	9611926560

Parts marked with □◆ are included in the service kits.
Recommended spare parts: Service kits.

TD 900-354/5

The drawing shows Unique Single Seat Valve - Aseptic.
The items refer to the parts list in the following sections

7.3 Change-over valve

If the actuator is marked with a danger warning do **NOT** attempt to cut the actuator open.

Do **NOT** attempt to disassemble the actuator due to spring under load danger!

Do **NOT** attempt to cut the actuator open, due to spring under load danger!

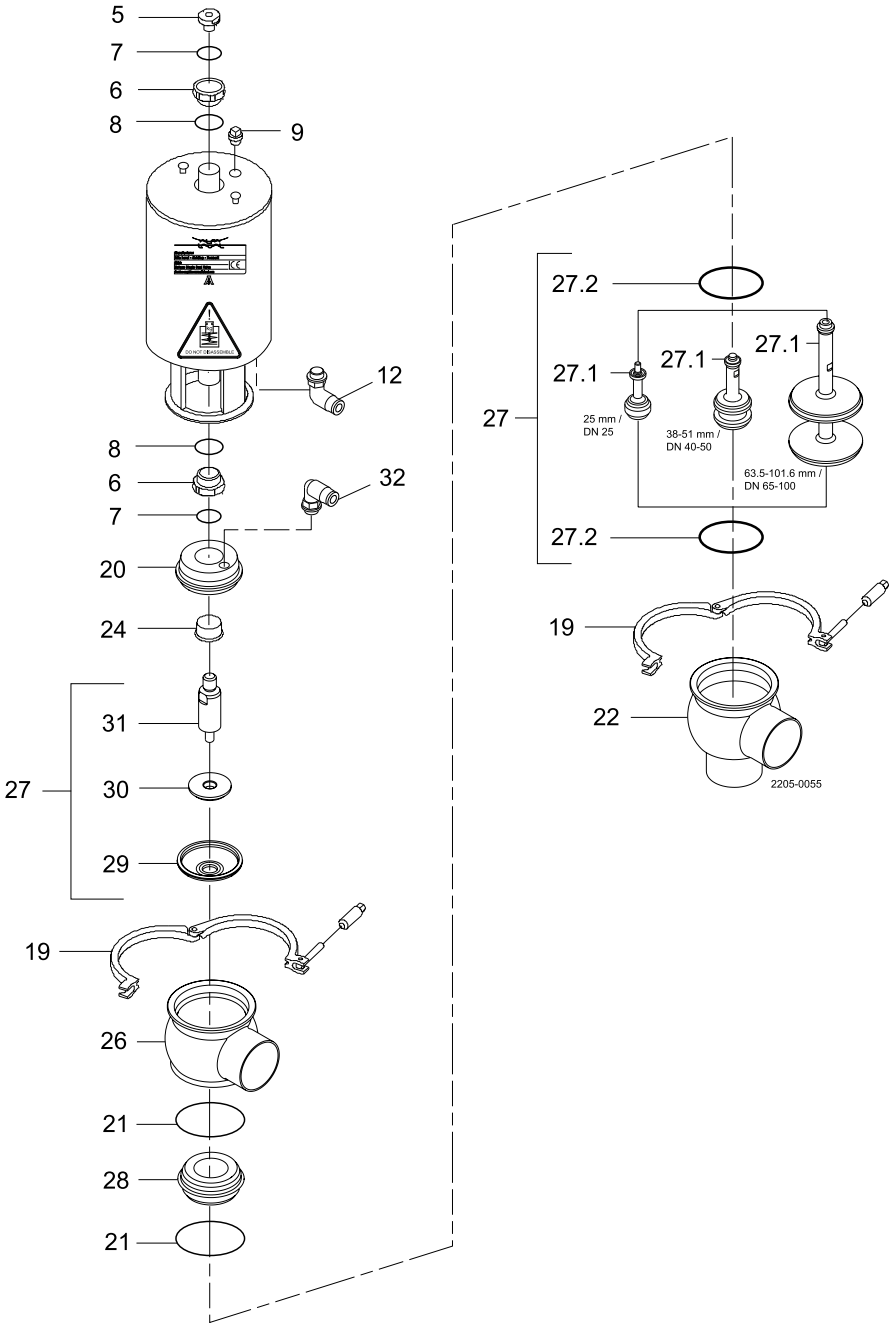

The drawing shows Unique Single Seat Valve - Aseptic.
The items refer to the parts list in the following sections

Parts list

Pos.	Qty	Denomination
5	1	Adapter
6 □	2	Bushing
7 □	2	O-ring
8 □	2	O-ring
9	1	Plug
12	1(2)	Air fitting
19	2	Clamp
20	1	Bonnet
21 ◆	2	O-ring
22	1	Valve body
24	1	Bushing
26	1	Valve body
27	1	Plug
27.1	1	Plug
27.2 ◆	2	Plug seal
28	1	Seat
29 ◆	1	Diaphragm
30	1	Disc for diaphragm
31	1	Upper spindle
32	1	Air fitting

Service kits

	Denomination	DN 25 25 mm	DN 40 38 mm	DN 50 51 mm	DN 65 63.5 mm	DN 80 76.1 mm	DN 100 101.6 mm
Service kit for actuator							
□	Service kit	9611926500	9611926500	9611926500	9611926500	9611926500	9611926500
Service kit for product wetted parts, standard							
◆	Service kit, EPDM	9611926615	9611926616	9611926617	9611926618	9611926619	9611926620
◆	Service kit, HNBR	9611926621	9611926622	9611926623	9611926624	9611926625	9611926626
◆	Service kit, FPM	9611926627	9611926628	9611926629	9611926630	9611926631	9611926632

Parts marked with □◆ are included in the service kits. Recommended spare parts: Service kits. TD 900-354/5

The drawing shows Unique Single Seat Valve - Aseptic.
The items refer to the parts list in the following sections

7.4 Maintainable actuator

If the actuator is marked with a danger warning do **NOT** attempt to cut the actuator open.

Do **NOT** attempt to disassemble the actuator due to spring under load danger!

Do **NOT** attempt to cut the actuator open, due to spring under load danger!

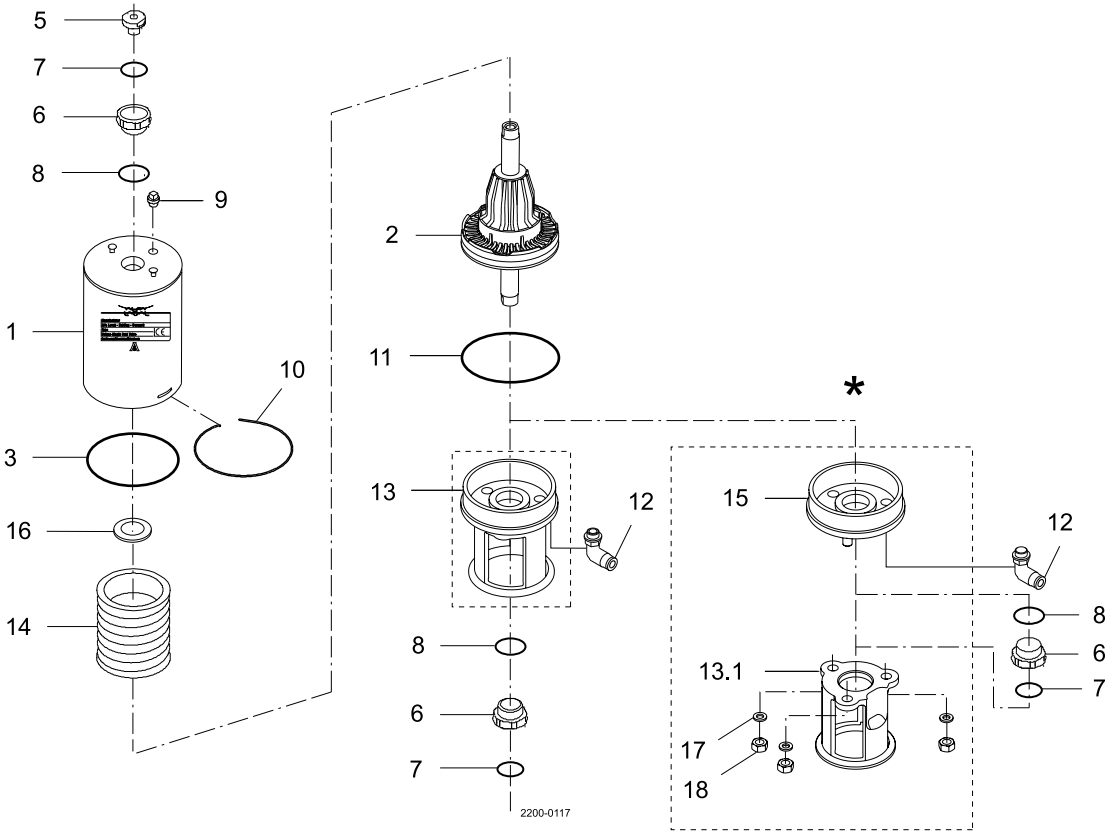

*) “Removable yoke with bolts” version, produced from 2006 to June 2016.
Replaced by “yoke without bolts” (13)

The drawing shows Unique Single Seat Valve - Aseptic.
The items refer to the parts list in the following sections

Parts list

Pos.		Qty	Denomination
1		1	Cylinder
2		1	Piston
3	□◆	1	O-ring
5		1	Adapter
6	□◆	2	Bushing
7	□◆	2	O-ring
8	□◆	2	O-ring
9		1	Plug
10		1	Lock wire
11	□◆	1	O-ring
12		1(2)	Air fitting (only 2 for A/A)
13		1	Yoke without bolts
13.1		1	Yoke (-> 0616)
14		1	Spring assembly
15		1	Bottom (-> 0616)
16	□◆	1(2)	Support disc (only 2 for A/A)
17		3	Washer (-> 0616)
18		3	Nut (-> 0616)

Service kits

	Denomination	DN 25 25 mm	DN 40 38 mm	DN 50 51 mm	DN 65 63.5 mm	DN 80 76.1 mm	DN 100 101.6 mm
Service kits							
□	Service kit, NO , NC	9611926497	9611926497	9611926498	9611926498	9611926499	9611926499
◆	Service kit, A/A	9611926519	9611926519	9611926520	9611926520	9611926521	9611926521

How to contact Alfa Laval
Contact details for all countries are
continually updated on our website.
Please visit www.alfalaval.com to access the information directly.